LAMPIRAN

Pengembangan prototipe sistem..., Rhandyka Jili Prasanto, FT UI, 2008

Program Keseluruhan

```
#include <tiny2313.h>
#include <delay.h>

// Alphanumeric LCD Module functions
#asm
   .equ __lcd_port=0x18 ;PORTB
#endasm
#include <lcd.h>

#define buzzer   PORTD.5
#define relay    PORTB.3
#define button   PIND.2
#define clutch   PIND.4
#define brake    PIND.3

unsigned long    timecount = 0;
unsigned int     on;

// Timer 0 overflow interrupt service routine
interrupt [TIM0_OVF] void timer0_ovf_isr(void)
{
   TCNT0 = 6;
   timecount ++;
   if (on == 1)
   {
        // check for 5 minute
       // 1 second = 677 timecount
        if (timecount == 203100)
       {
           buzzer = 0;

                       // LCD Notification
                       lcd_clear();
                       lcd_gotoxy (0,0);
                       lcd_putsf ("TIME REMAINING");
                         lcd_gotoxy (0,1);
                         lcd_putsf ("5 SECOND");
                         delay_ms(1000);
                         lcd_clear();
       }

        // notification for last 5 second, buzzer on
        else if (timecount > 203100 && timecount < 206485)
        {
                buzzer = 1;


                     // LCD Notification
                     lcd_gotoxy (0,0);
                     lcd_putsf  ("ACTIVATE NOW");
        }
```


Pengembangan prototipe sistem..., Rhandyka Jili Prasanto, FT UI, 2008

```
        // time ended, either do the program
        else if (timecount == 206485)
        {
           buzzer = 0;
           relay  = 0;

                     // LCD Notification
                     lcd_clear();
                     lcd_gotoxy (0,0);
                     lcd_putsf ("SYSTEM END");
                     delay_ms(1000);
                     lcd_clear();

      // set default value
      on = 0;
      timecount = 0;

      }

    }
}


void main(void)
{

// Crystal Oscillator division factor: 1
CLKPR=0x80;
CLKPR=0x00;

// Port B initialization
// Func0=Out Func1=Out Func2=Out Func3=Out Func4=Out
   Func5=Out Func6=Out Func7=Out
// State0=0 State1=0 State2=0 State3=0 State4=0 State5=0
   State6=0 State7=0
PORTB=0x00;
DDRB=0xFF;


// Port D initialization
// Func6=In Func5=Out Func4=In Func3=In Func2=In Func1=In
   Func0=In
// State6=T State5=0 State4=T State3=T State2=T State1=T
   State0=T
PORTD=0x00;
DDRD=0x20;

// Timer/Counter 0 initialization
// Clock source: System Clock
// Clock value: 172.800 kHz
```

```
// Mode: Normal top=FFh
// OC0A output: Disconnected
// OC0B output: Disconnected
TCCR0A=0x00;
TCCR0B=0x03;
TCNT0=0x00;
OCR0A=0x00;
OCR0B=0x00;

// Timer(s)/Counter(s) Interrupt(s) initialization
TIMSK=0x02;

// LCD module initialization
lcd_init(16);

// Global enable interrupts
#asm("sei")


while (1)
      {

      if (button == 1)
            {
                  timecount = 0;
                  on = 1;
                  relay = 1;
                  buzzer = 0;

                        // LCD Notification
                        lcd_clear ();
                        lcd_gotoxy (0,0);
                        lcd_putsf ("SYSTEM ACTIVATED");

            }

      if (on == 1)
            {
                  if (clutch == 1)
                  {
                        relay = 0;
                        buzzer = 0;
                        on = 0;

                              // LCD Notification
                              lcd_clear();
                              lcd_gotoxy (0,0);
                              lcd_putsf ("SYSTEM END");
                              delay_ms(1000);
                              lcd_clear();

                  }
```

```
                if (brake == 1)
                {
                      relay = 0;
                      buzzer = 0;
                      on = 0;

                            // LCD Notification
                            lcd_clear();
                            lcd_gotoxy (0,0);
                            lcd_putsf ("SYSTEM END");
                            delay_ms(1000);
                            lcd_clear();

                }
            }

        if (on == 0)
            {
                lcd_gotoxy (0,0);
                lcd_putsf ("READY TO");
                lcd_gotoxy (0,1);
                lcd_putsf ("ACTIVATE");
             }
        };
}
```


Pengembangan prototipe sistem..., Rhandyka Jili Prasanto, FT UI, 2008

Features

- Utilizes the AVR® RISC Architecture
- AVR – High-performance and Low-power RISC Architecture
  - 120 Powerful Instructions – Most Single Clock Cycle Execution
  - 32 x 8 General Purpose Working Registers
  - Fully Static Operation
  - Up to 20 MIPS Throughput at 20 MHz
- Data and Non-volatile Program and Data Memories
  - 2K Bytes of In-System Self Programmable Flash
    Endurance 10000 Write/Erase Cycles
  - 128 Bytes In-System Programmable EEPROM
    Endurance: 100,000 Write/Erase Cycles
  - 128 Bytes Internal SRAM
  - Programming Lock for Flash Program and EEPROM Data Security
- Peripheral Features
  - One 8-bit Timer/Counter with Separate Prescaler and Compare Mode
  - One 16-bit Timer/Counter with Separate Prescaler, Compare and Capture Modes
  - Four PWM Channels
  - On-chip Analog Comparator
  - Programmable Watchdog Timer with On-chip Oscillator
  - USI – Universal Serial Interface
  - Full Duplex USART
- Special Microcontroller Features
  - debugWIRE On-chip Debugging
  - In-System Programmable via SPI Port
  - External and Internal Interrupt Sources
  - Low-power Idle, Power-down, and Standby Modes
  - Enhanced Power-on Reset Circuit
  - Programmable Brown-out Detection Circuit
  - Internal Calibrated Oscillator
- I/O and Packages
  - 18 Programmable I/O Lines
  - 20-pin PDIP, 20-pin SOIC, 20-pad QFN/MLF
- Operating Voltages
  - 1.8 - 5.5V (ATtiny2313V)
  - 2.7 - 5.5V (ATtiny2313)
- Speed Grades
  - ATtiny2313V: 0 - 4 MHz @ 1.8 - 5.5V, 0 - 10 MHz @ 2.7 - 5.5V
  - ATtiny2313: 0 - 10 MHz @ 2.7 - 5.5V, 0 - 20 MHz @ 4.5 - 5.5V
- Typical Power Consumption
  - Active Mode
    1 MHz, 1.8V: 230 µA
    32 kHz, 1.8V: 20 µA (including oscillator)
  - Power-down Mode
    < 0.1 µA at 1.8V

8-bit AVR® Microcontroller with 2K Bytes In-System Programmable Flash

ATtiny2313/V

Preliminary

Rev. 2543I-AVR-04/08

Pengembangan prototipe sistem..., Rhandyka Jili Prasanto, FT UI, 2008

Pin Configurations

Figure 1. Pinout ATtiny2313

PDIP/SOIC

MLF

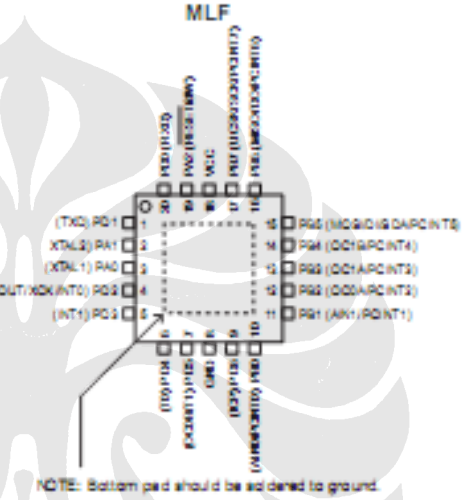

NOTE: Bottom pad should be soldered to ground.

Overview

The ATtiny2313 is a low-power CMOS 8-bit microcontroller based on the AVR enhanced RISC architecture. By executing powerful instructions in a single clock cycle, the ATtiny2313 achieves throughputs approaching 1 MIPS per MHz allowing the system designer to optimize power consumption versus processing speed.

Pengembangan prototipe sistem..., Rhandyka Jili Prasanto, FT UI, 2008

Block Diagram

Figure 2. Block Diagram

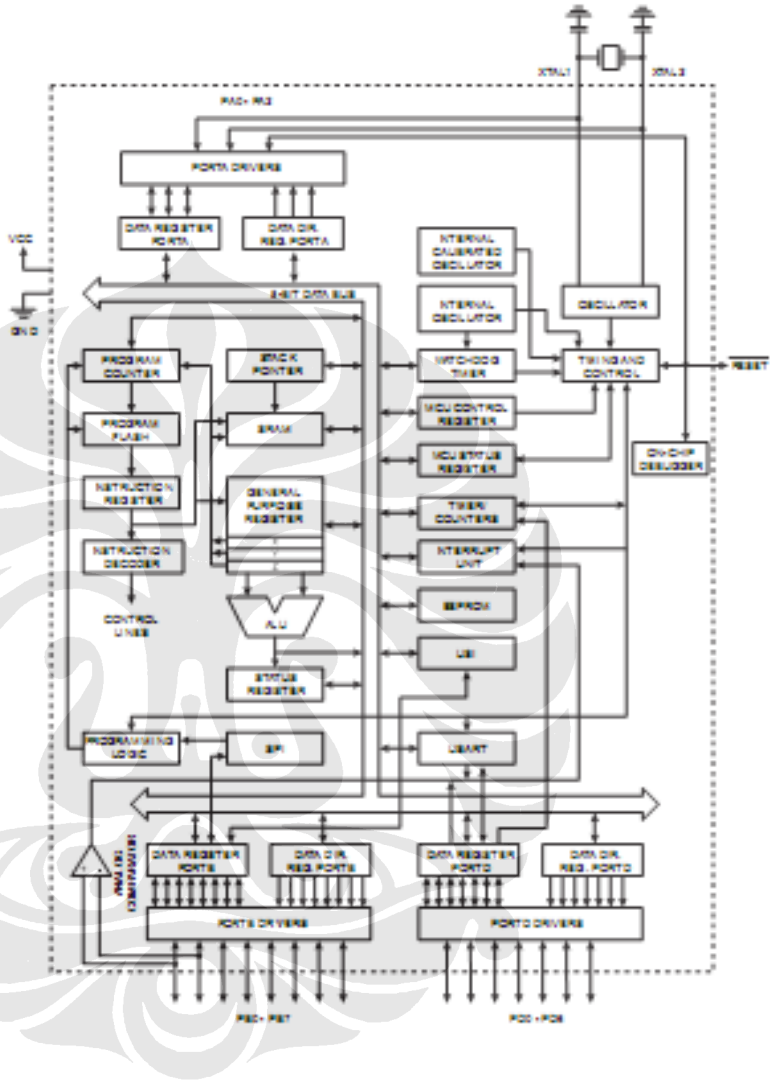

Pengembangan prototipe sistem..., Rhandyka Jili Prasanto, FT UI, 2008

The AVR core combines a rich instruction set with 32 general purpose working registers. All the 32 registers are directly connected to the Arithmetic Logic Unit (ALU), allowing two independent registers to be accessed in one single instruction executed in one clock cycle. The resulting architecture is more code efficient while achieving throughputs up to ten times faster than conventional CISC microcontrollers.

The ATtiny2313 provides the following features: 2K bytes of In-System Programmable Flash, 128 bytes EEPROM, 128 bytes SRAM, 18 general purpose I/O lines, 32 general purpose working registers, a single-wire Interface for On-chip Debugging, two flexible Timer/Counters with compare modes, internal and external interrupts, a serial programmable USART, Universal Serial Interface with Start Condition Detector, a programmable Watchdog Timer with internal Oscillator, and three software selectable power saving modes. The Idle mode stops the CPU while allowing the SRAM, Timer/Counters, and interrupt system to continue functioning. The Power-down mode saves the register contents but freezes the Oscillator, disabling all other chip functions until the next interrupt or hardware reset. In Standby mode, the crystal/resonator Oscillator is running while the rest of the device is sleeping. This allows very fast start-up combined with low-power consumption.

The device is manufactured using Atmel's high density non-volatile memory technology. The On-chip ISP Flash allows the program memory to be reprogrammed In-System through an SPI serial interface, or by a conventional non-volatile memory programmer. By combining an 8-bit RISC CPU with In-System Self-Programmable Flash on a monolithic chip, the Atmel ATtiny2313 is a powerful microcontroller that provides a highly flexible and cost effective solution to many embedded control applications.

The ATtiny2313 AVR is supported with a full suite of program and system development tools including: C Compilers, Macro Assemblers, Program Debugger/Simulators, In-Circuit Emulators, and Evaluation kits.

Pengembangan prototipe sistem..., Rhandyka Jili Prasanto, FT UI, 2008

Pin Descriptions

VCC	Digital supply voltage.
GND	Ground.
Port A (PA2..PA0)	Port A is a 3-bit bi-directional I/O port with internal pull-up resistors (selected for each bit). The Port A output buffers have symmetrical drive characteristics with both high sink and source capability. As inputs, Port A pins that are externally pulled low will source current if the pull-up resistors are activated. The Port A pins are tri-stated when a reset condition becomes active, even if the clock is not running. Port A also serves the functions of various special features of the ATtiny2313 as listed on page 56.
Port B (PB7..PB0)	Port B is an 8-bit bi-directional I/O port with internal pull-up resistors (selected for each bit). The Port B output buffers have symmetrical drive characteristics with both high sink and source capability. As inputs, Port B pins that are externally pulled low will source current if the pull-up resistors are activated. The Port B pins are tri-stated when a reset condition becomes active, even if the clock is not running. Port B also serves the functions of various special features of the ATtiny2313 as listed on page 56.
Port D (PD6..PD0)	Port D is a 7-bit bi-directional I/O port with internal pull-up resistors (selected for each bit). The Port D output buffers have symmetrical drive characteristics with both high sink and source capability. As inputs, Port D pins that are externally pulled low will source current if the pull-up resistors are activated. The Port D pins are tri-stated when a reset condition becomes active, even if the clock is not running. Port D also serves the functions of various special features of the ATtiny2313 as listed on page 59.
$\overline{\text{RESET}}$	Reset input. A low level on this pin for longer than the minimum pulse length will generate a reset, even if the clock is not running. The minimum pulse length is given in Table 15 on page 37. Shorter pulses are not guaranteed to generate a reset. The Reset input is an alternate function for PA2 and dW.
XTAL1	Input to the inverting Oscillator amplifier and input to the internal clock operating circuit. XTAL1 is an alternate function for PA0.
XTAL2	Output from the inverting Oscillator amplifier. XTAL2 is an alternate function for PA1.

Pengembangan prototipe sistem..., Rhandyka Jili Prasanto, FT UI, 2008

April 1998

National Semiconductor

LM123/LM323A/LM323
3-Amp, 5-Volt Positive Regulator

General Description

The LM123 is a three-terminal positive regulator with a preset 5V output and a load driving capability of 3 amps. New circuit design and processing techniques are used to provide the high output current without sacrificing the regulation characteristics of lower current devices.

The LM323A offers improved precision over the standard LM323. Parameters with tightened specifications include output voltage tolerance, line regulation, and load regulation.

The 3 amp regulator is virtually blowout proof. Current limiting, power limiting, and thermal shutdown provide the same high level of reliability obtained with these techniques in the LM109 1 amp regulator.

No external components are required for operation of the LM123. If the device is more than 4 inches from the filter capacitor, however, a 1 µF solid tantalum capacitor should be used on the input. A 0.1 µF or larger capacitor may be used on the output to reduce load transient spikes created by fast switching digital logic, or to swamp out stray load capacitance.

An overall worst case specification for the combined effects of input voltage, load currents, ambient temperature, and power dissipation ensure that the LM123 will perform satisfactorily as a system element.

For applications requiring other voltages, see LM150 series adjustable regulator data sheet.

Operation is guaranteed over the junction temperature range −55˚C to +150˚C for LM123, −40˚C to +125˚C for LM323A, and 0˚C to +125˚C for LM323. A hermetic TO-3 package is used for high reliability and low thermal resistance.

Features

- Guaranteed 1% initial accuracy (A version)
- 3 amp output current
- Internal current and thermal limiting
- 0.01Ω typical output impedance
- 7.5V minimum input voltage
- 30W power dissipation
- P^+ Product Enhancement tested

Connection Diagram

Metal Can Package

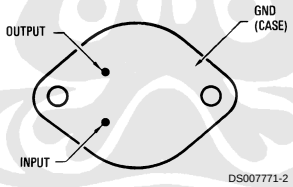

DS007771-2

Order Number LM123K STEEL, LM323AK STEEL or LM323K STEEL
See NS Package Number K02A
Order Number LM123K/883
See NS Package Number K02C

Typical Applications

Basic 3 Amp Regulator

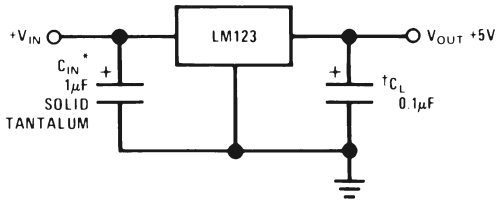

DS007771-3

*Required if LM123 is more than 4" from filter capacitor.
†Regulator is stable with no load capacitor into resistive loads.

© 1999 National Semiconductor Corporation

Pengembangan prototipe sistem..., Rhandyka Jili Prasanto, FT UI, 2008

Absolute Maximum Ratings (Note 1)

If Military/Aerospace specified devices are required, please contact the National Semiconductor Sales Office/ Distributors for availability and specifications.

(Note 5)

Input Voltage	20V
Power Dissipation	Internally Limited

Operating Junction Temperature Range	
LM123	−55˚C to +150˚C
LM323A	−40˚C to +125˚C
LM323	0˚C to +125˚C
Storage Temperature Range	−65˚C to +150˚C
Lead Temperature (Soldering, 10 sec.)	300˚C
ESD Tolerance (Note 5)	2000V

LM123 Electrical Characteristics (Note 2)

Parameter	Conditions	LM123			Units
		Min	Typ	Max	
Output Voltage	T_j = 25˚C V_{IN} = 7.5V, I_{OUT} = 0A	4.7	5	5.3	V
	7.5V ≤ V_{IN} ≤ 15V 0A ≤ I_{OUT} ≤ 3A, P ≤ 30W	4.6		5.4	V
Line Regulation (Note 4)	T_j = 25˚C 7.5V ≤ V_{IN} ≤ 15V		5	25	mV
Load Regulation (Note 4)	T_j = 25˚C, V_{IN} = 7.5V, 0A ≤ I_{OUT} ≤ 3A		25	100	mV
Quiescent Current	7.5V ≤ V_{IN} ≤ 15V, 0A ≤ I_{OUT} ≤ 3A		12	20	mA
Output Noise Voltage	T_j = 25˚C 10 Hz ≤ f ≤ 100 kHz		40		µVrms
Short Circuit Current Limit	T_j = 25˚C V_{IN} = 15V V_{IN} = 7.5V		 3 4	 4.5 5	 A A
Long Term Stability				35	mV
Thermal Resistance Junction to Case (Note 3)			2		˚C/W

LM323A/LM323 Electrical Characteristics (Note 2)

Parameter	Conditions	LM323A			LM323			Units
		Min	Typ	Max	Min	Typ	Max	
Output Voltage	T_j = 25˚C V_{IN} = 7.5V, I_{OUT} = 0A	4.95	5	5.05	4.8	5	5.2	V
	7.5V ≤ V_{IN} ≤ 15V 0A ≤ I_{OUT} ≤ 3A, P ≤ 30W	4.85		5.15	4.75		5.25	V
Line Regulation (Note 4)	T_j = 25˚C 7.5V ≤ V_{IN} ≤ 15V		5	10		5	25	mV
Load Regulation (Note 4)	T_j = 25˚C, V_{IN} = 7.5V, 0A ≤ I_{OUT} ≤ 3A		25	50		25	100	mV
Quiescent Current	7.5V ≤ V_{IN} ≤ 15V, 0A ≤ I_{OUT} ≤ 3A		12	20		12	20	mA
Output Noise Voltage	T_j = 25˚C 10 Hz ≤ f ≤ 100 kHz		40			40		µVrms
Short Circuit Current Limit	T_j = 25˚C V_{IN} = 15V V_{IN} = 7.5V		 3 4	 4.5 6		 3 4	 4.5 5	 A A
Long Term Stability				35			35	mV
Thermal Resistance Junction to Case (Note 3)			2			2		˚C/W

Pengembangan prototipe sistem..., Rhandyka Jili Prasanto, FT UI, 2008

LM323A/LM323 Electrical Characteristics (Note 2) (Continued)

Note 1: "Absolute Maximum Ratings" indicate limits beyond which damage to the device may occur. Operating Ratings indicate conditions for which the device is functional, but do not guarantee specific performance limits.

Note 2: Unless otherwise noted, specifications apply for $-55^{\circ}C \le T_J \le +150^{\circ}C$ for the LM123, $-40^{\circ}C \le T_J \le +125^{\circ}C$ for the LM323A, and $0^{\circ}C \le T_J \le +125^{\circ}C$ for the LM323. Although power dissipation is internally limited, specifications apply only for $P \le 30W$.

Note 3: Without a heat sink, the thermal resistance of the TO-3 package is about 35°C/W. With a heat sink, the effective thermal resistance can only approach the specified values of 2°C/W, depending on the efficiency of the heat sink.

Note 4: Load and line regulation are specified at constant junction temperature. Pulse testing is required with a pulse width ≤ 1 ms and a duty cycle ≤ 5%.

Note 5: Refer to RETS123K drawing for LM123K military specifications.

Note 6: Human body model, 1.5 kΩ in series with 100 pF.

Typical Performance Characteristics

Maximum Average Power Dissipation for LM123

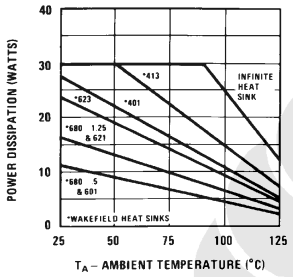

DS007771-9

Maximum Average Power Dissipation for LM323A, LM323

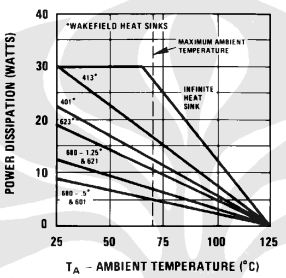

DS007771-10

Output Impedance

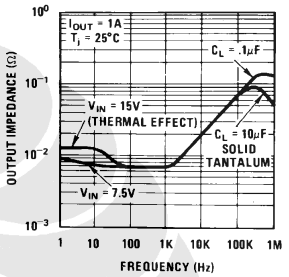

DS007771-11

Peak Available Output Current

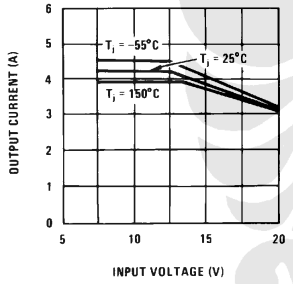

DS007771-12

Short Circuit Current

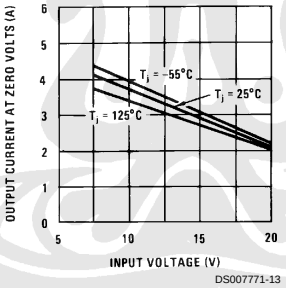

DS007771-13

Ripple Rejection

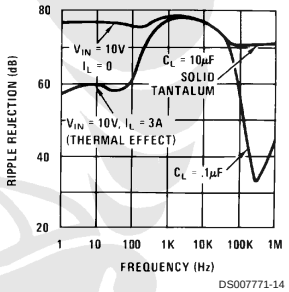

DS007771-14

Dropout Voltage

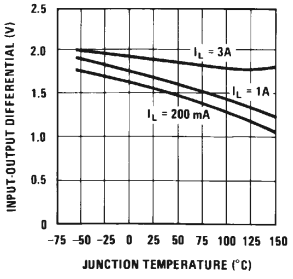

DS007771-15

Line Transient Response

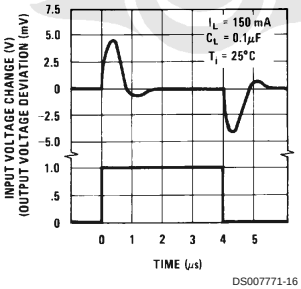

DS007771-16

Output Voltage

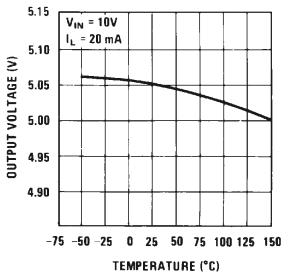

DS007771-17

Pengembangan prototipe sistem..., Rhandyka Jili Prasanto, FT UI, 2008

Typical Performance Characteristics (Continued)

Quiescent Current

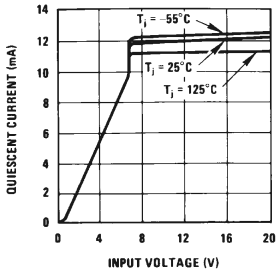

DS007771-18

Load Transient Response

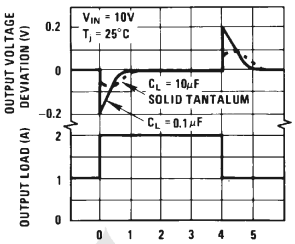

DS007771-19

Output Noise Voltage

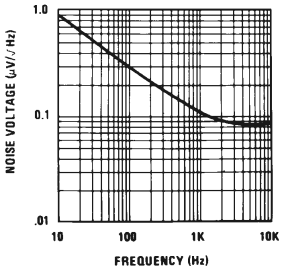

DS007771-20

Typical Applications

10 Amp Regulator with Complete Overload Protection

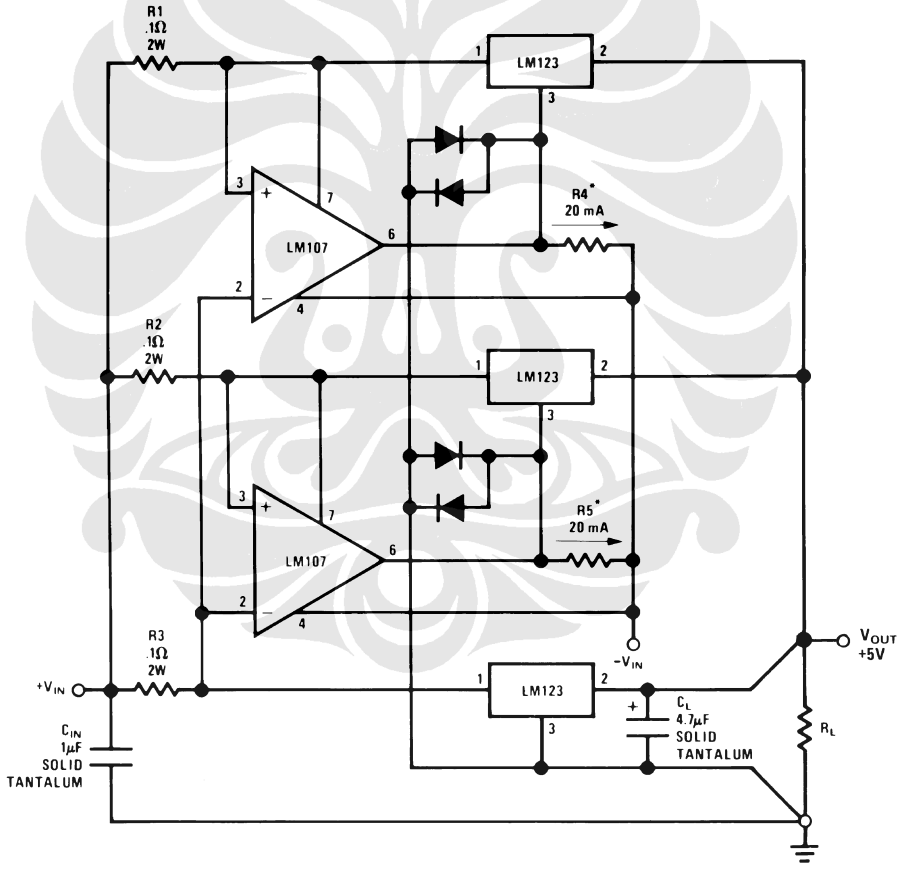

DS007771-6

*Select for 20 mA Current from Unregulated Negative Supply

Pengembangan prototipe sistem..., Rhandyka Jili Prasanto, FT UI, 2008

Typical Applications (Continued)

Adjustable Regulator 0V−10V @ 3A

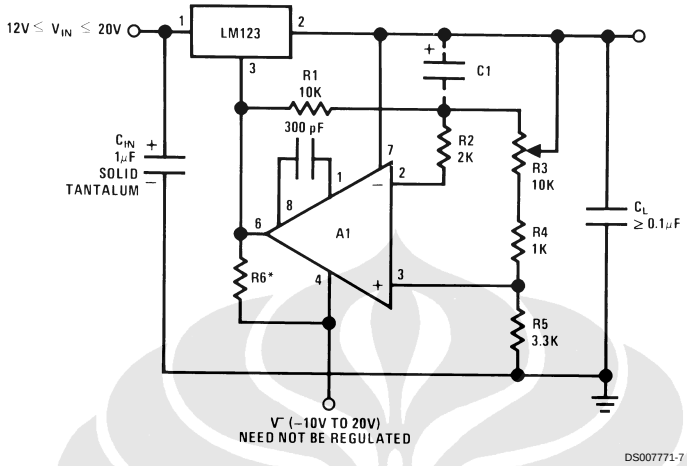

$$*R6 = \frac{V^-}{12\ mA}$$

A_1 — LM101A
C_1 — 2 μF Optional — Improves Ripple Rejection, Noise, and Transient Response

Trimming Output to 5V

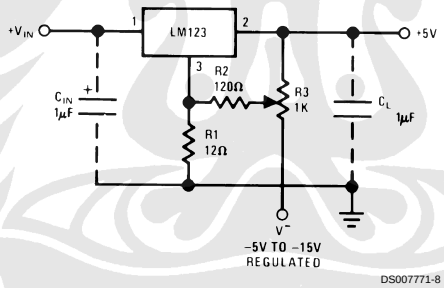

Adjustable Output 5V−10V 0.1% Regulation

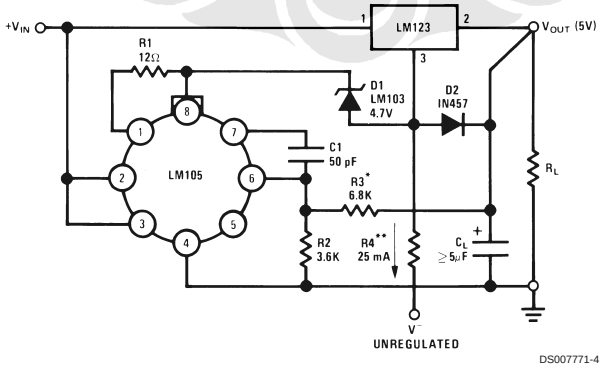

*Select to Set Output Voltage
**Select to Draw 25 mA from V⁻

Pengembangan prototipe sistem..., Rhandyka Jili Prasanto, FT UI, 2008

Schematic Diagram

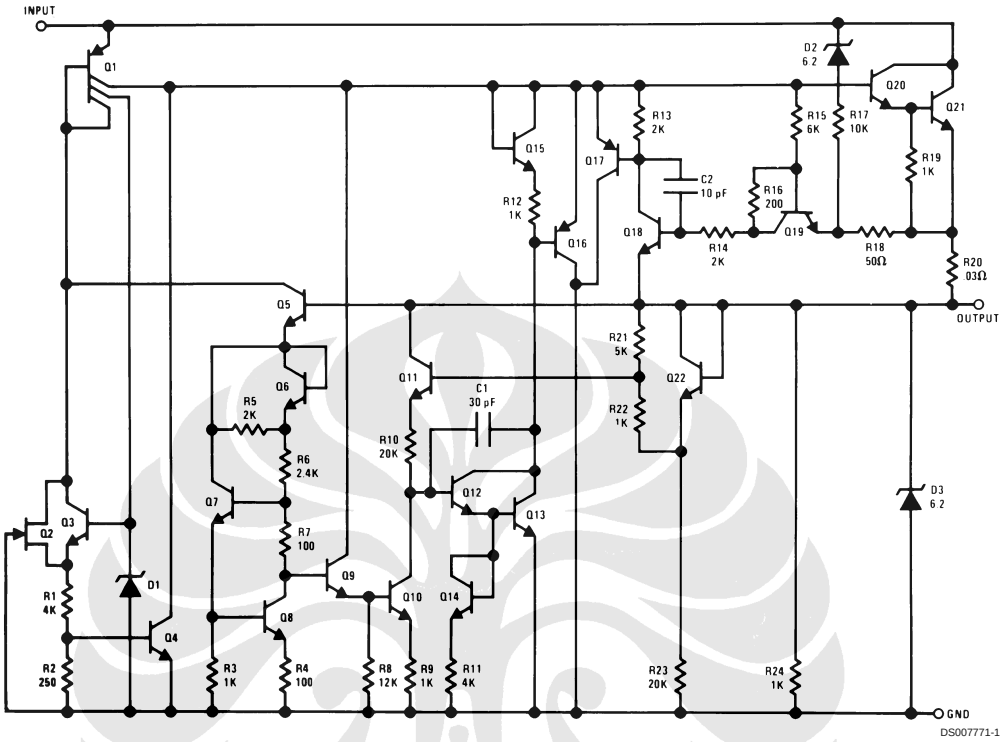

Pengembangan prototipe sistem..., Rhandyka Jili Prasanto, FT UI, 2008

Physical Dimensions inches (millimeters) unless otherwise noted

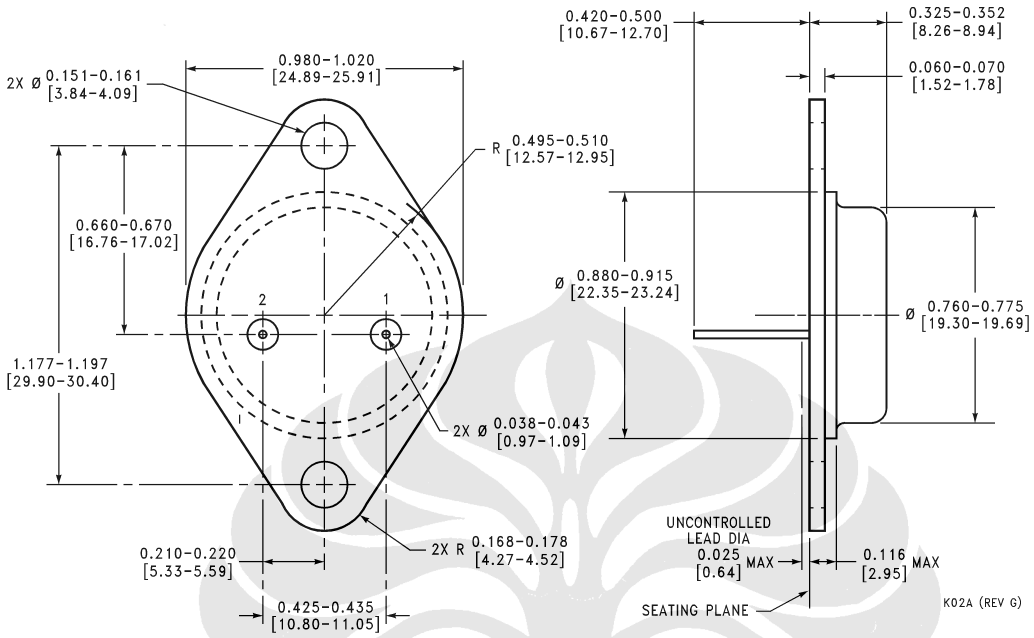

Metal Can Package (K)
Order Number LM123K STEEL, LM323AK STEEL or LM323K STEEL
NS Package Number K02A

Pengembangan prototipe sistem..., Rhandyka Jili Prasanto, FT UI, 2008

Physical Dimensions inches (millimeters) unless otherwise noted (Continued)

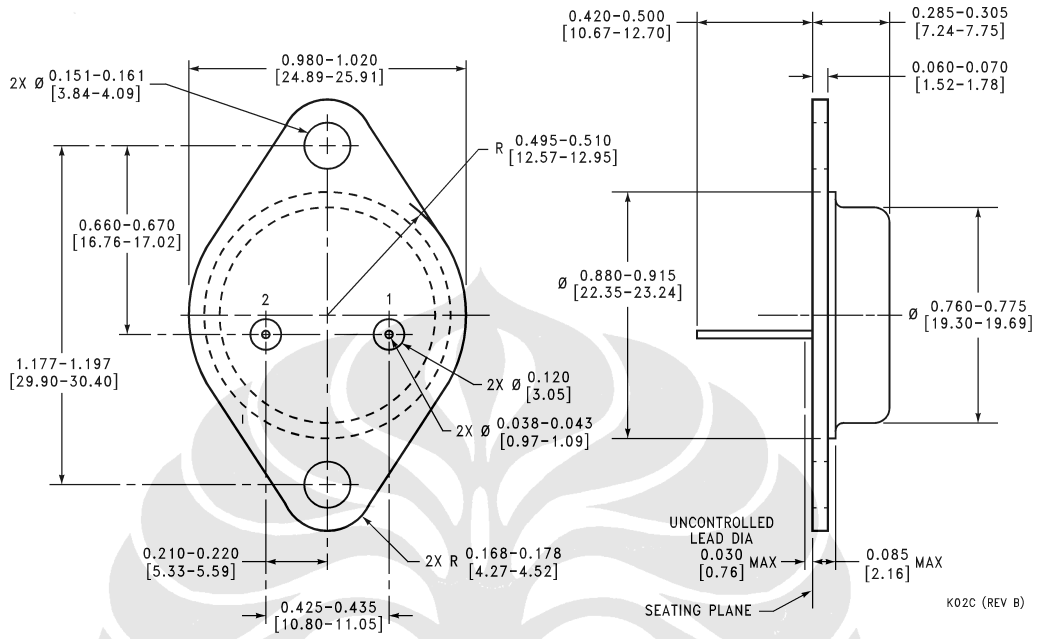

Metal Can Package (K)
Mil-Aero Product
Order Number LM123K/883
NS Package Number K02C

LIFE SUPPORT POLICY

NATIONAL'S PRODUCTS ARE NOT AUTHORIZED FOR USE AS CRITICAL COMPONENTS IN LIFE SUPPORT DEVICES OR SYSTEMS WITHOUT THE EXPRESS WRITTEN APPROVAL OF THE PRESIDENT AND GENERAL COUNSEL OF NATIONAL SEMICONDUCTOR CORPORATION. As used herein:

1. Life support devices or systems are devices or systems which, (a) are intended for surgical implant into the body, or (b) support or sustain life, and whose failure to perform when properly used in accordance with instructions for use provided in the labeling, can be reasonably expected to result in a significant injury to the user.
2. A critical component is any component of a life support device or system whose failure to perform can be reasonably expected to cause the failure of the life support device or system, or to affect its safety or effectiveness.

National Semiconductor Corporation
Americas
Tel: 1-800-272-9959
Fax: 1-800-737-7018
Email: support@nsc.com
www.national.com

National Semiconductor Europe
Fax: +49 (0) 1 80-530 85 86
Email: europe.support@nsc.com
Deutsch Tel: +49 (0) 1 80-530 85 85
English Tel: +49 (0) 1 80-532 78 32
Français Tel: +49 (0) 1 80-532 93 58
Italiano Tel: +49 (0) 1 80-534 16 80

National Semiconductor Asia Pacific Customer Response Group
Tel: 65-2544466
Fax: 65-2504466
Email: sea.support@nsc.com

National Semiconductor Japan Ltd.
Tel: 81-3-5639-7560
Fax: 81-3-5639-7507

National does not assume any responsibility for use of any circuitry described, no circuit patent licenses are implied and National reserves the right at any time without notice to change said circuitry and specifications.

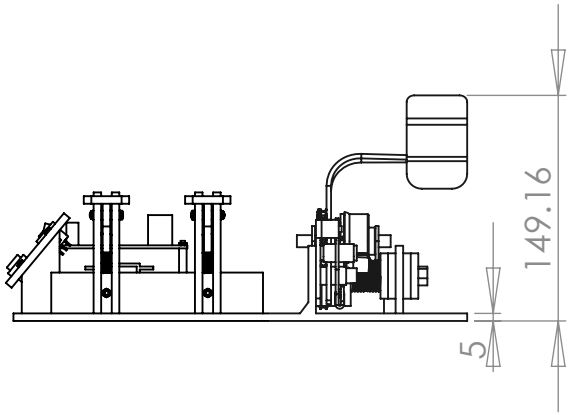

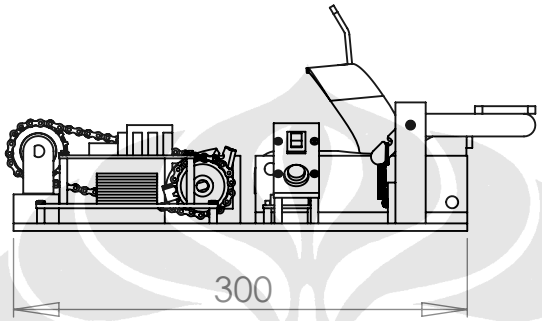

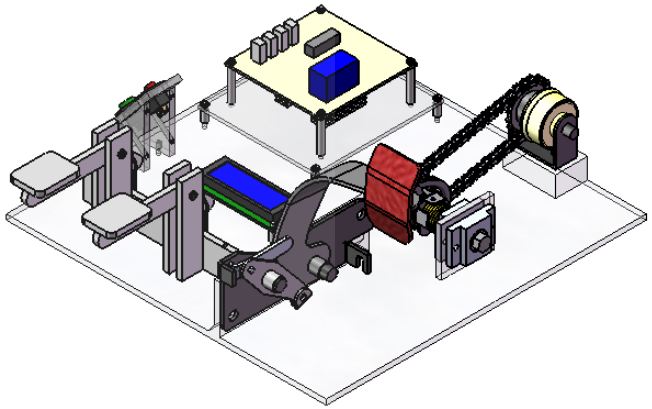

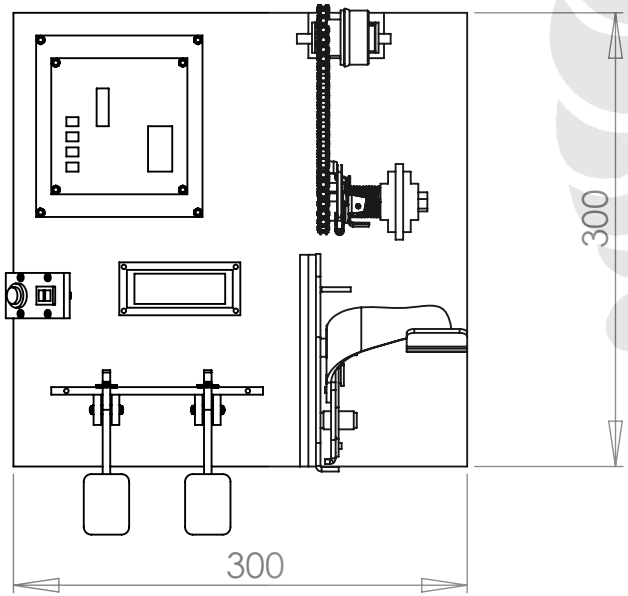

Skala = 1 : 5	Digambar : Rhandyka J.P./Bogie F.S.	PERINGATAN
Satuan = mm	NPM : 0404027074/0404020169	
Tanggal = 20-06-08	Disetujui : Dr. Ir. Gandjar Kiswanto, MEng	

Pengembangan prototipe sistem ... Rhandyka Jili Prasanto, FT UI, 2008

DTM FTUI ***TEST BED*** **A4**

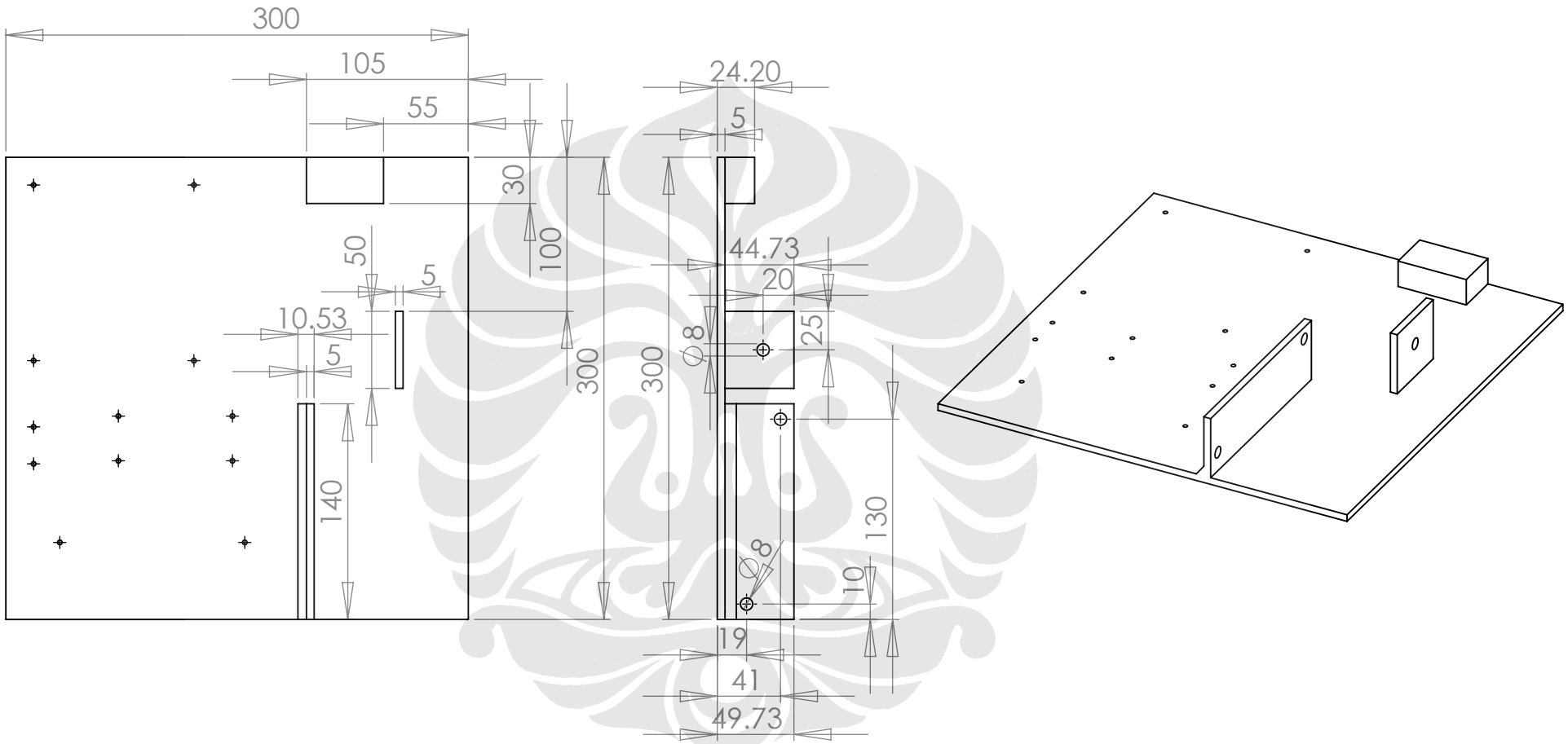

Skala = 1 : 4	Digambar : Bogie F.S/Rhandyka Jili P.	PERINGATAN
Satuan = mm	NPM : 0404020169/0404027074	
Tanggal = 20-06-08	Disetujui : Dr. Ir. Gandjar Kiswanto, MEng	

DTM FTUI ***BASE TEST BED*** **A4**

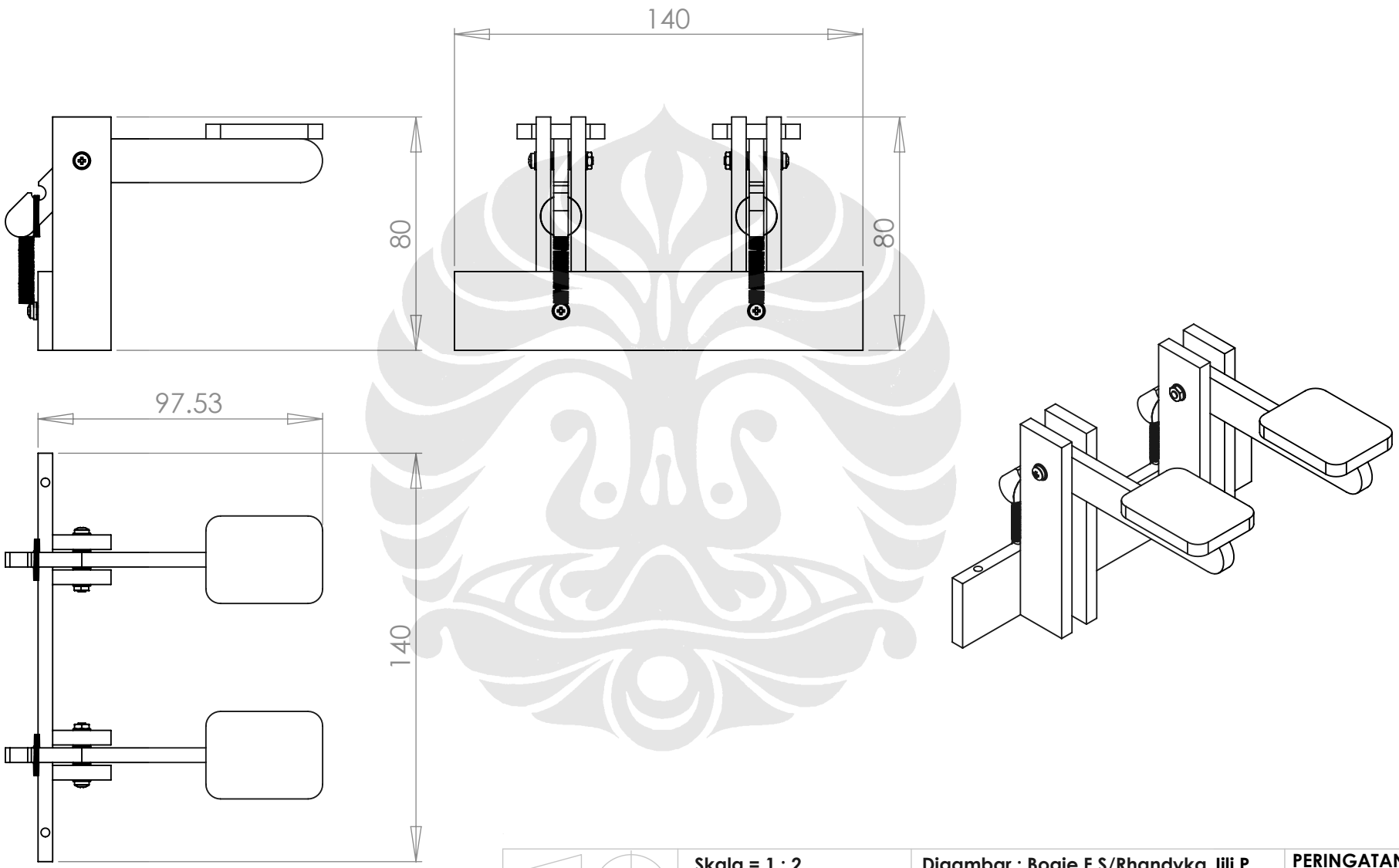

Skala = 1 : 2	Digambar : Bogie F.S/Rhandyka Jili P.	PERINGATAN
Satuan = mm	NPM : 0404020169/0404027074	
Tanggal = 20-06-08	Disetujui : Dr. Ir. Gandjar Kiswanto, MEng	

DTM FTUI ***REM DAN KOPLING*** **A4**

Pengembangan prototipe sistem ..., Rhandyka Jili Prasanto, FT UI, 2008

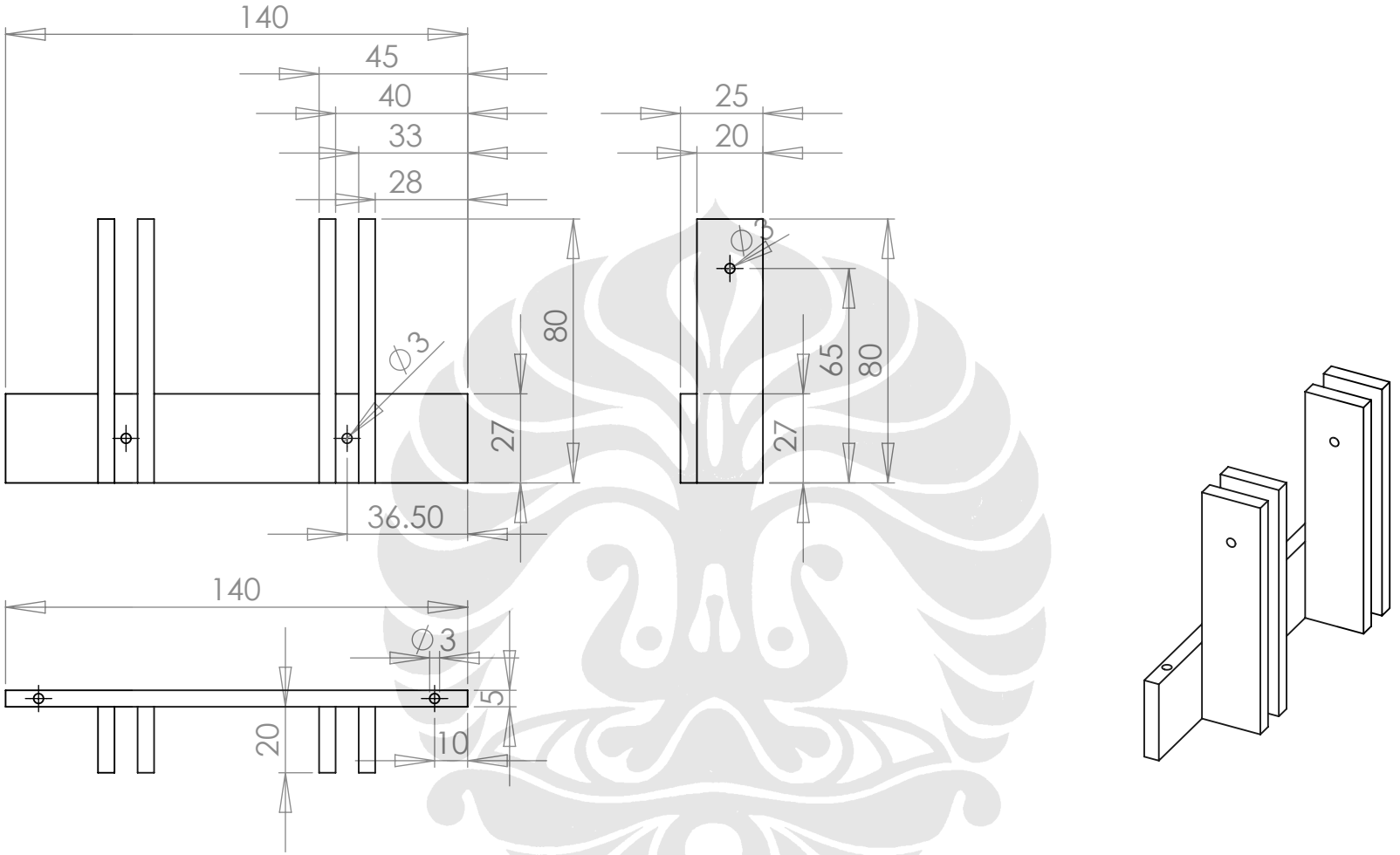

Skala = 1 : 2	Digambar : Bogie F.S/Rhandyka Jili P.	PERINGATAN
Satuan = mm	NPM : 0404020169/0404027074	
Tanggal = 20-06-08	Disetujui : Dr. Ir. Gandjar Kiswanto, MEng	

Pengembangan prototipe sistem ... Rhandyka Jili Prasaoto, FTUI, 2008

DTM FTUI ***DUDUKAN REM DAN KOPLING*** **A4**

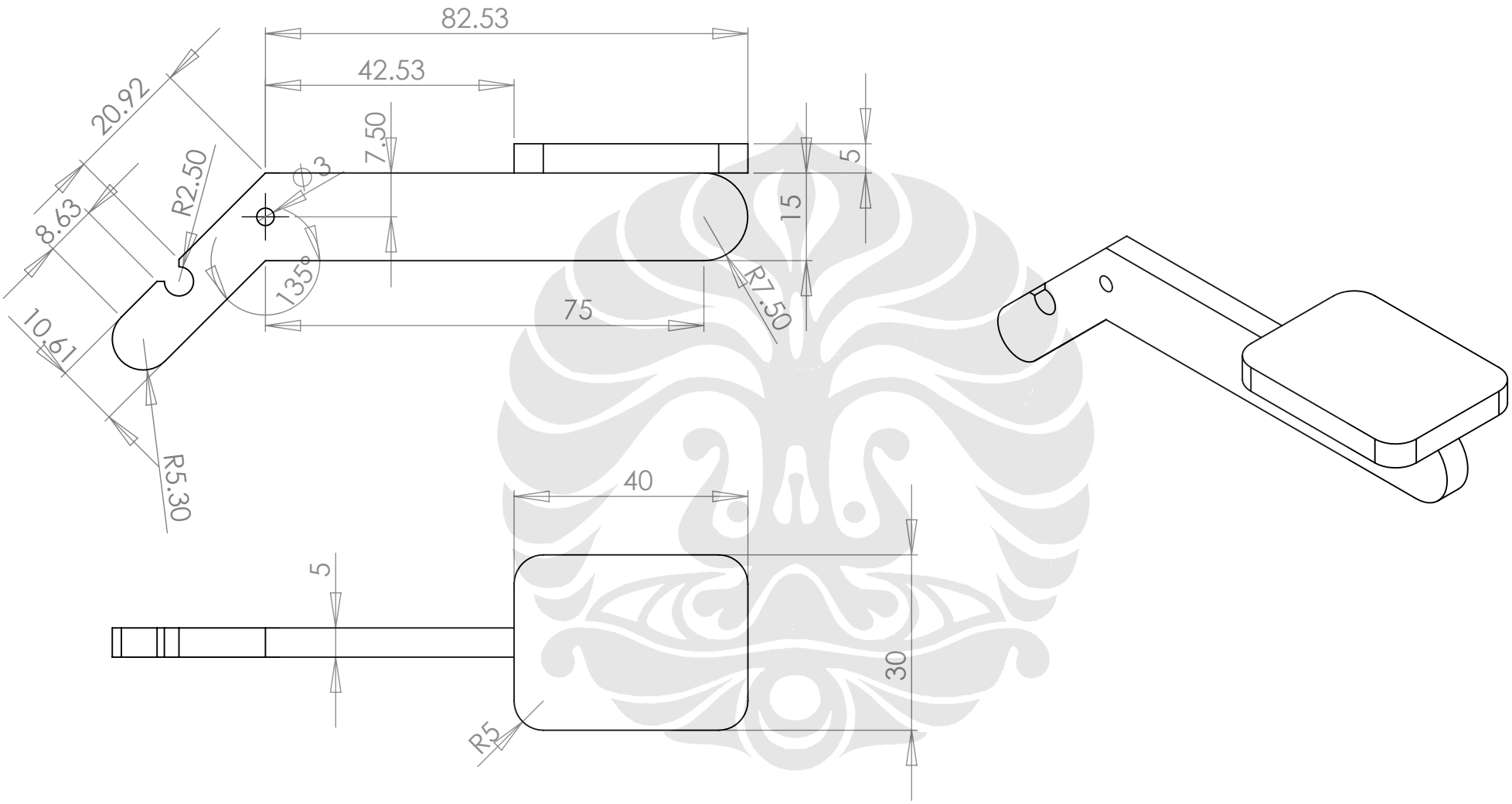

Skala = 1 : 1	Digambar : Bogie F.S/Rhandyka Jili P.	PERINGATAN
Satuan = mm	NPM : 0404020169/0404027074	
Tanggal = 20-06-08	Disetujui : Dr. Ir. Gandjar Kiswanto, MEng	

Pengembangan prototipe sistem ... Rhandyka Jili Prasanto, FTUI, 2008

DTM FTUI — ***REM DAN KOPLING*** — **A4**

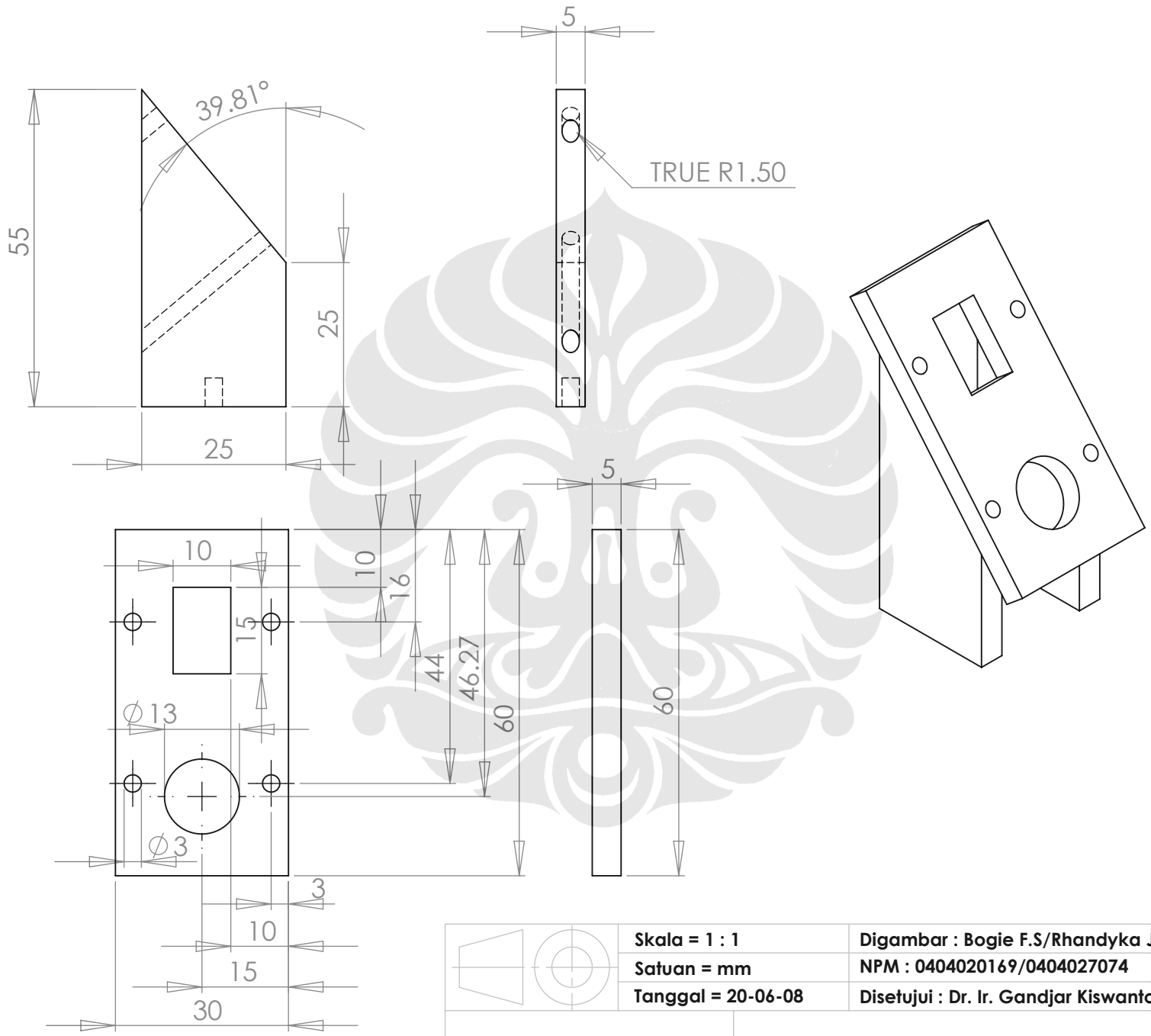

	Skala = 1 : 1	Digambar : Bogie F.S/Rhandyka Jili P.	PERINGATAN
	Satuan = mm	NPM : 0404020169/0404027074	
	Tanggal = 20-06-08	Disetujui : Dr. Ir. Gandjar Kiswanto, MEng	

DTM FTUI ***TEMPAT SAKLAR*** **A4**

Pengembangan prototipe sistem ... Rhandyka Jili Prasanto, FT UI, 2008

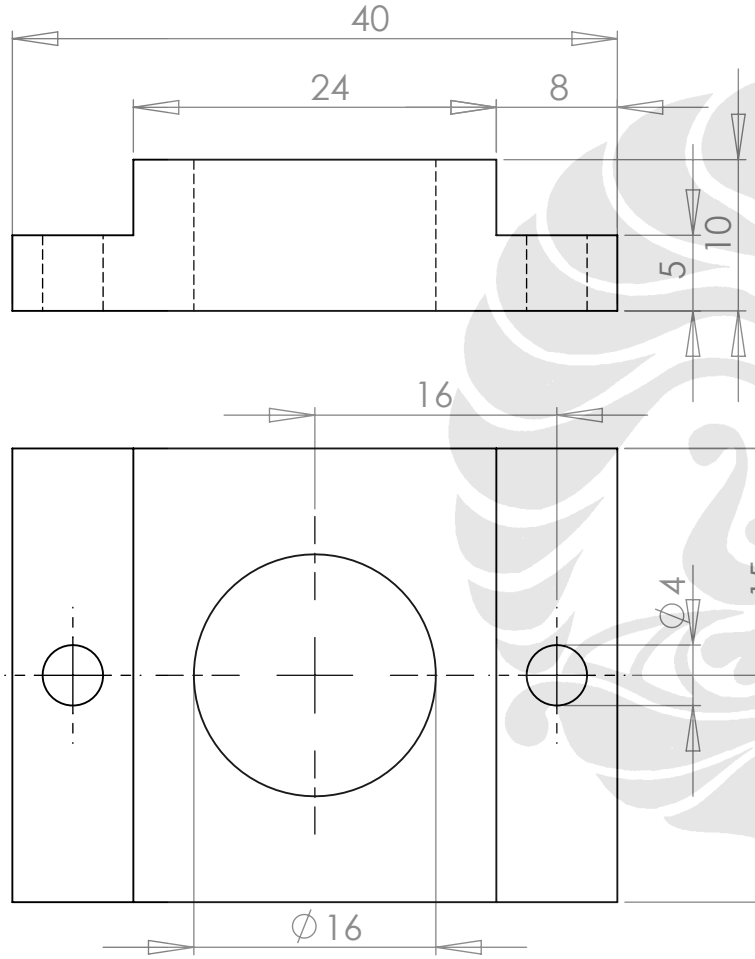

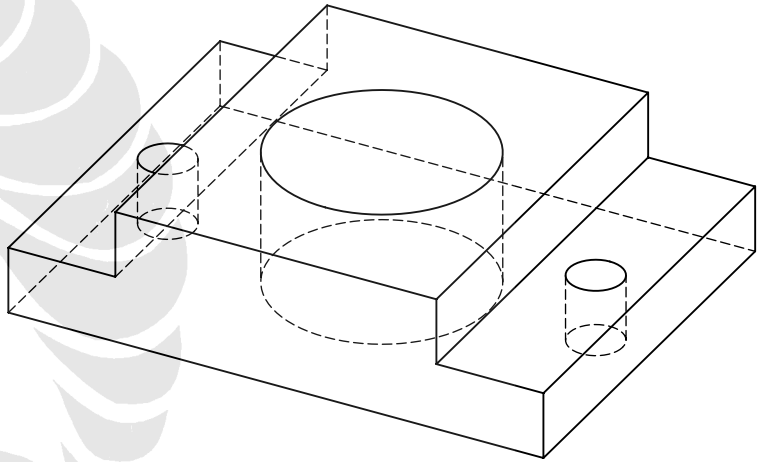

	Skala = 2 : 1	Digambar : Bogie F.S/Rhandyka Jili P.	PERINGATAN
	Satuan = mm	NPM : 0404020169/0404027074	
	Tanggal = 20-06-08	Disetujui : Dr. Ir. Gandjar Kiswanto, MEng	

DTM FTUI — ***RUMAH BEARING*** — **A4**

Pengembangan prototipe sistem ... Rhandyka Jili Prasanto, FT UI, 2004

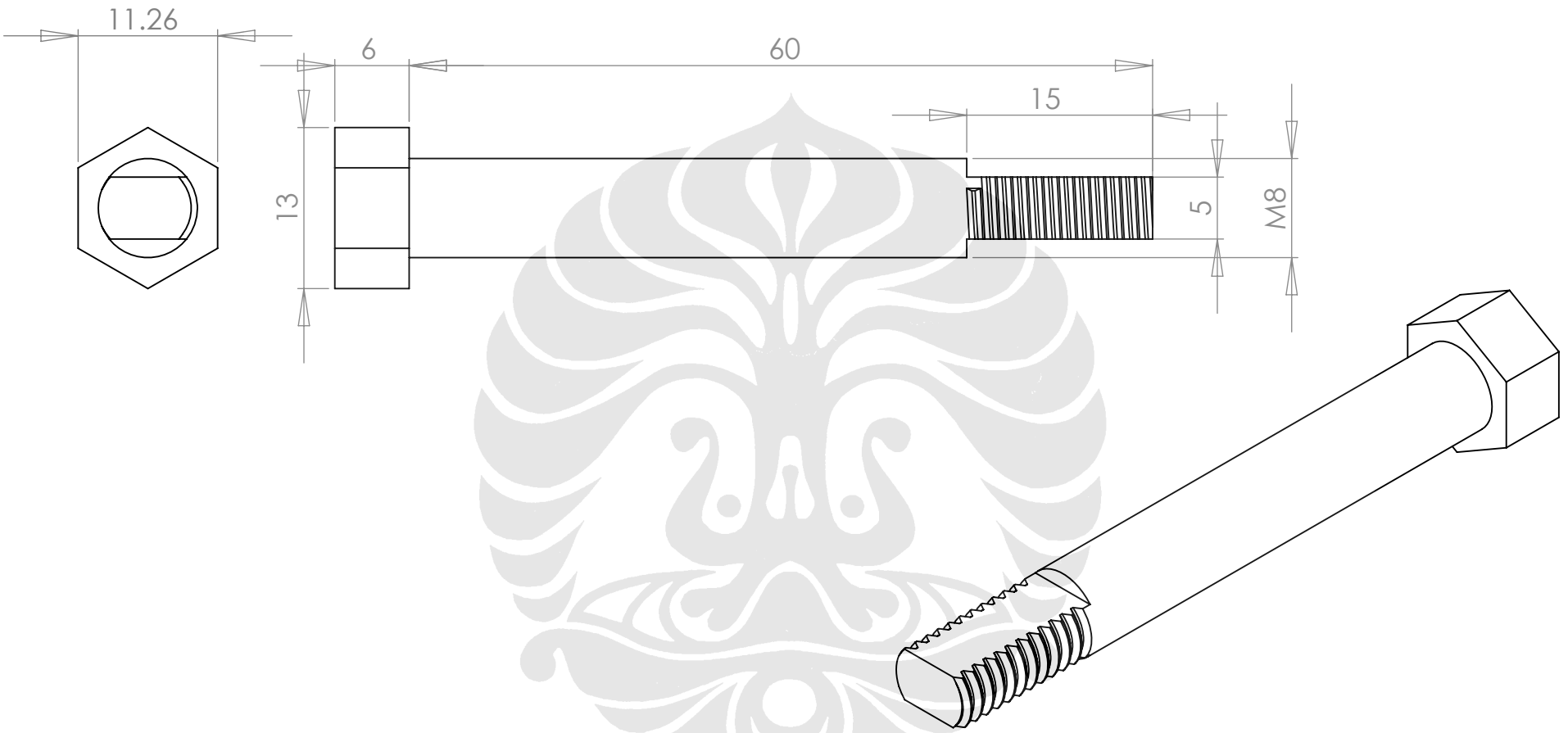

Skala = 2 : 1	Digambar : Bogie F.S/Rhandyka Jili P.	PERINGATAN
Satuan = mm	NPM : 0404020169/0404027074	
Tanggal = 20-06-08	Disetujui : Dr. Ir. Gandjar Kiswanto, MEng	

Pengembangan prototipe sistem ... Rhandyka Jili Prasanto, FT UI, 2008

DTM FTUI — ***THORTLE BOLT*** — **A4**

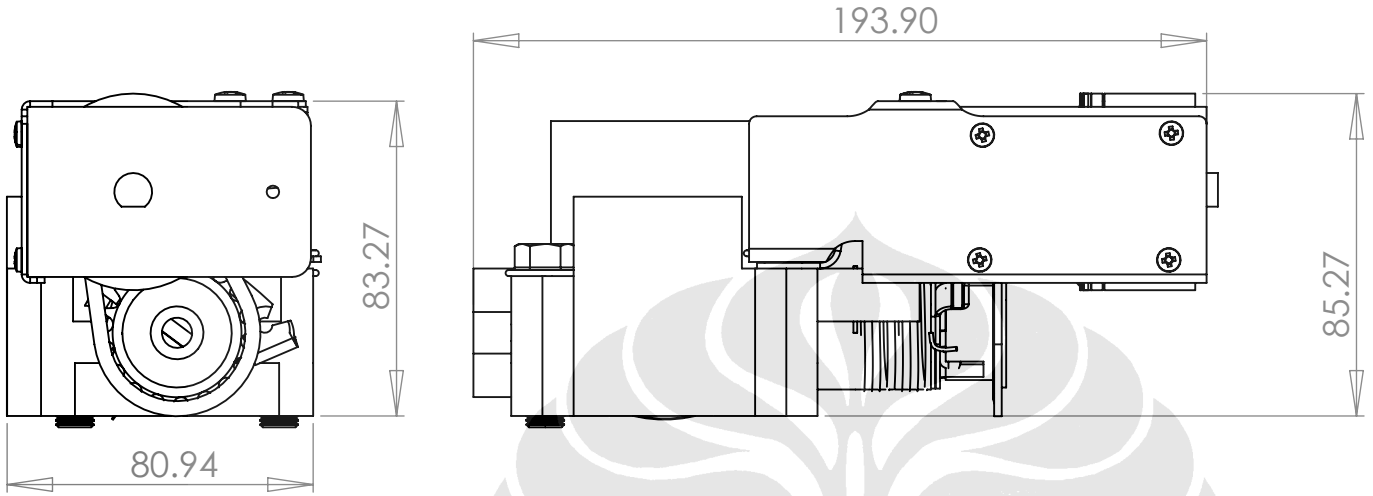

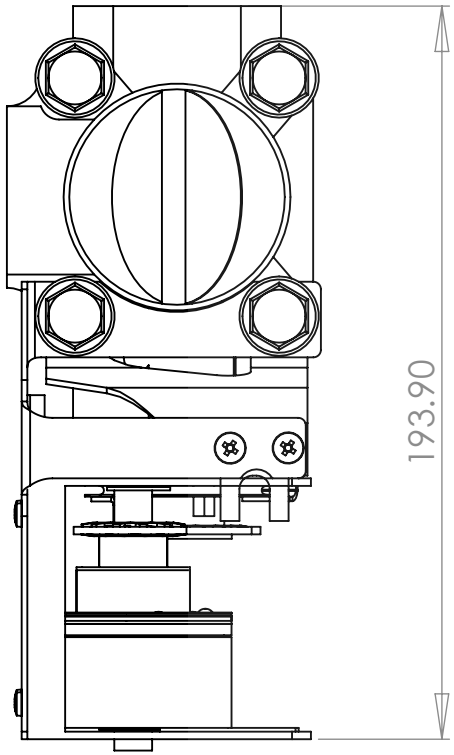

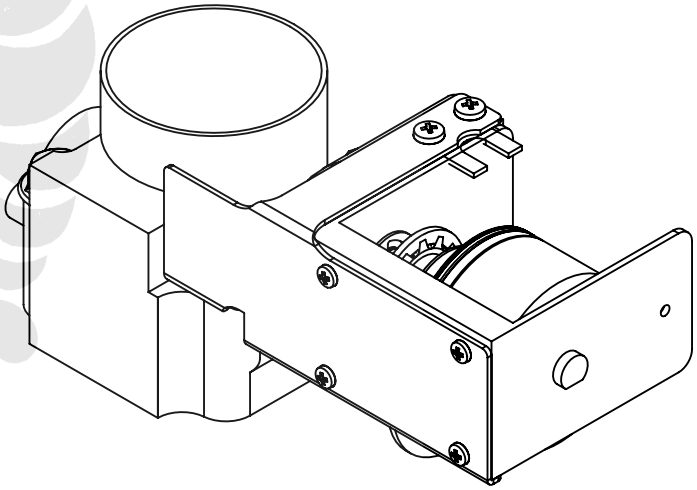

Skala = 1 : 2	Digambar : Bogie F.S/Rhandyka Jili P.	PERINGATAN
Satuan = mm	NPM : 0404020169/0404027074	
Tanggal = 20-06-08	Disetujui : Dr. Ir. Gandjar Kiswanto, MEng	

Pengembangan prototipe sistem ... Rhandyka Jili Prasanto, FT UI, 2008.

DTM FTUI ***DESIGN 01*** **A4**

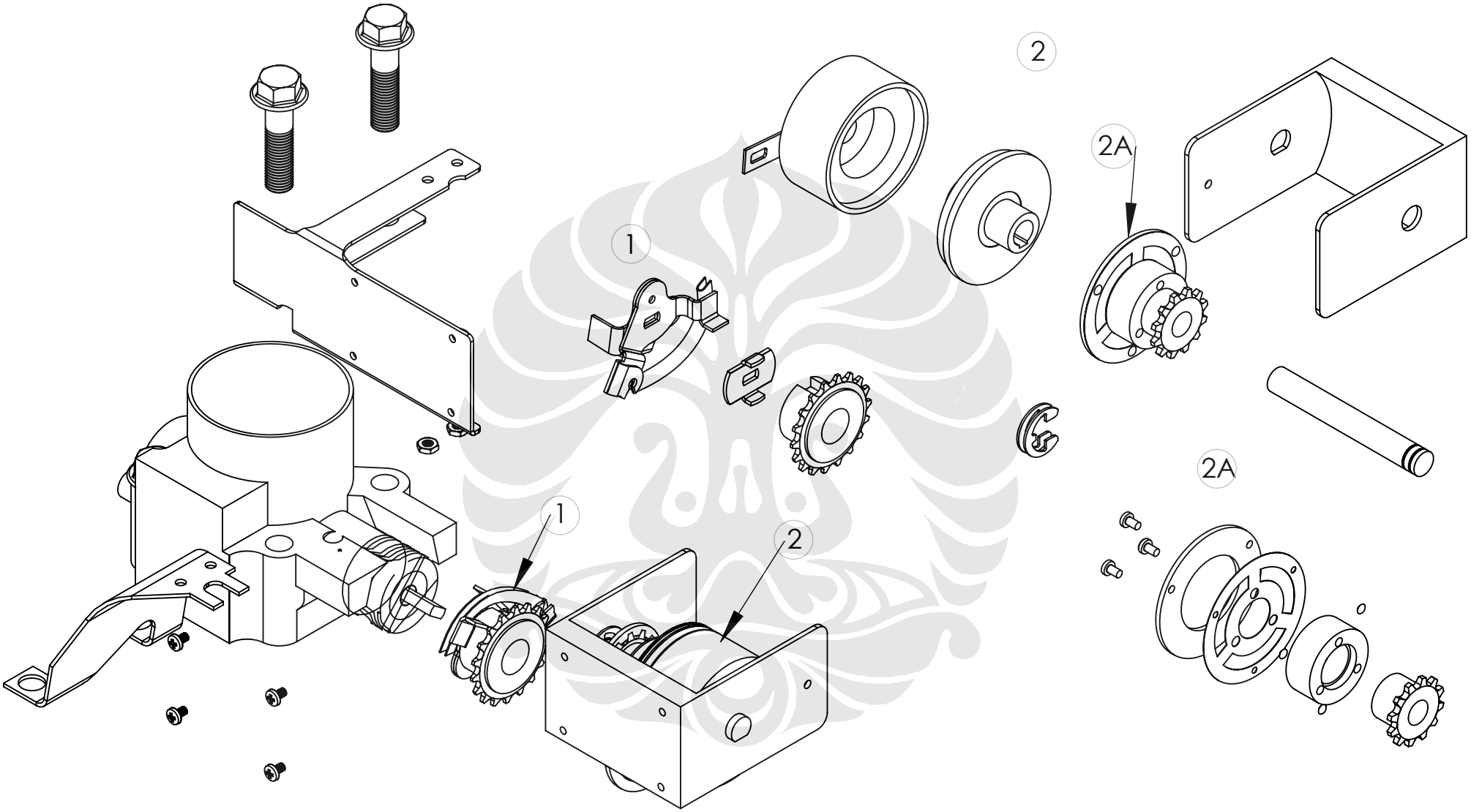

Skala = 1 : 2	Digambar : Bogie F.S/Rhandyka Jili P.	PERINGATAN
Satuan = mm	NPM : 0404020169/0404027074	
Tanggal = 20-06-08	Disetujui : Dr. Ir. Gandjar Kiswanto, MEng	

Pengembangan prototipe sistem ... Rhandyka Jili Prasanto, FT UI, 2008

DTM FTUI ***DESIGN 01*** **A4**

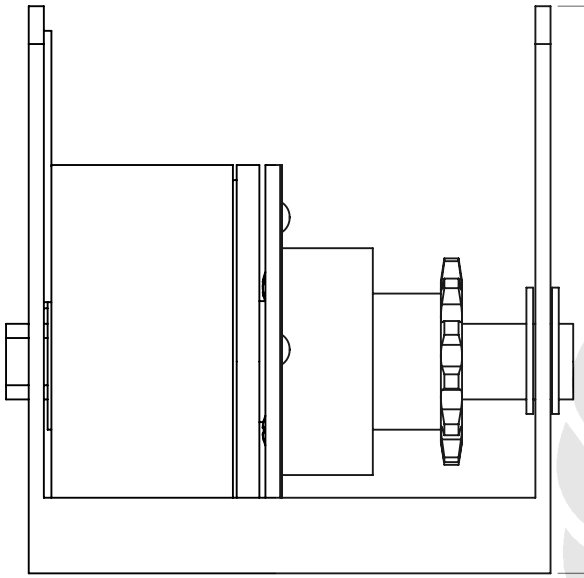

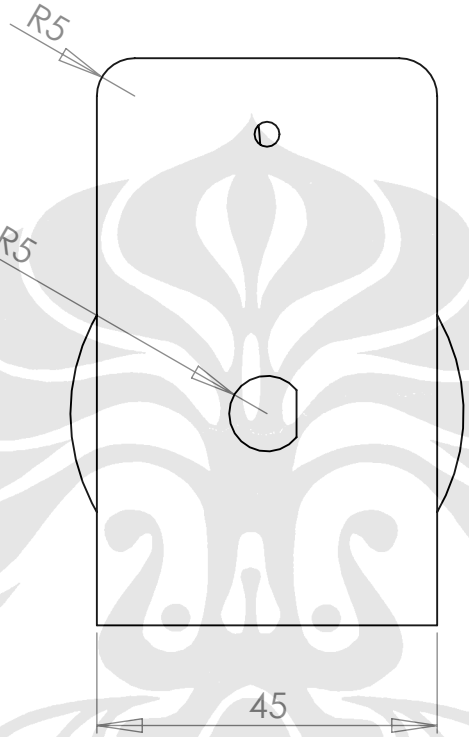

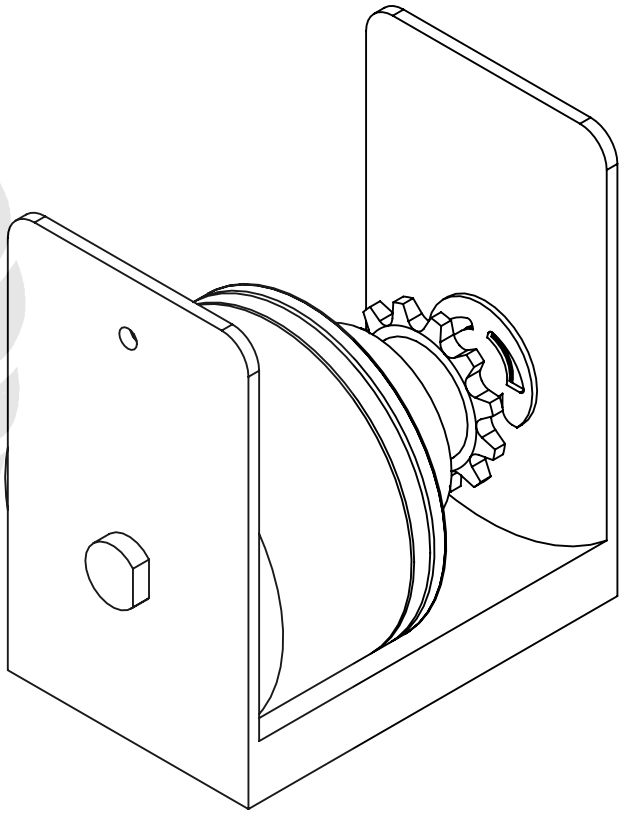

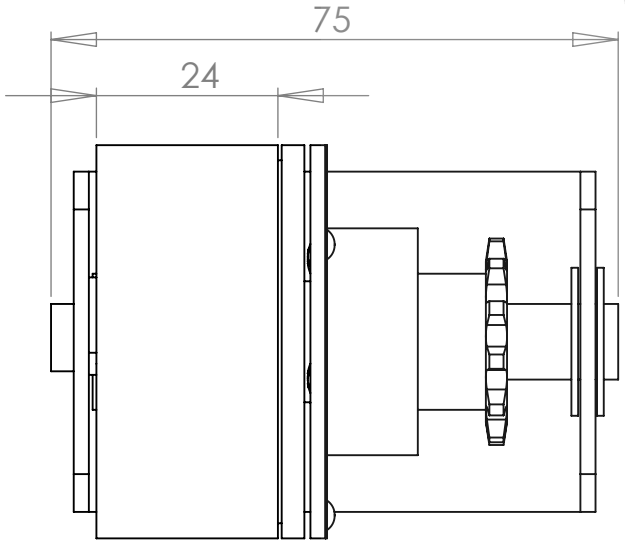

Skala = 1 : 1	Digambar : Bogie F.S/Rhandyka Jili P	PERINGATAN
Satuan = mm	NPM : 0404020169/0404027074	
Tanggal = 20-06-08	Disetujui : Dr. Ir. Gandjar Kiswanto, MEng	

DTM FTUI — *MAGNETIC CLUTCH & HOLDER* — A4

Pengembangan prototipe sistem / Rhandyka Jili Prasanto, FT UI, 2008

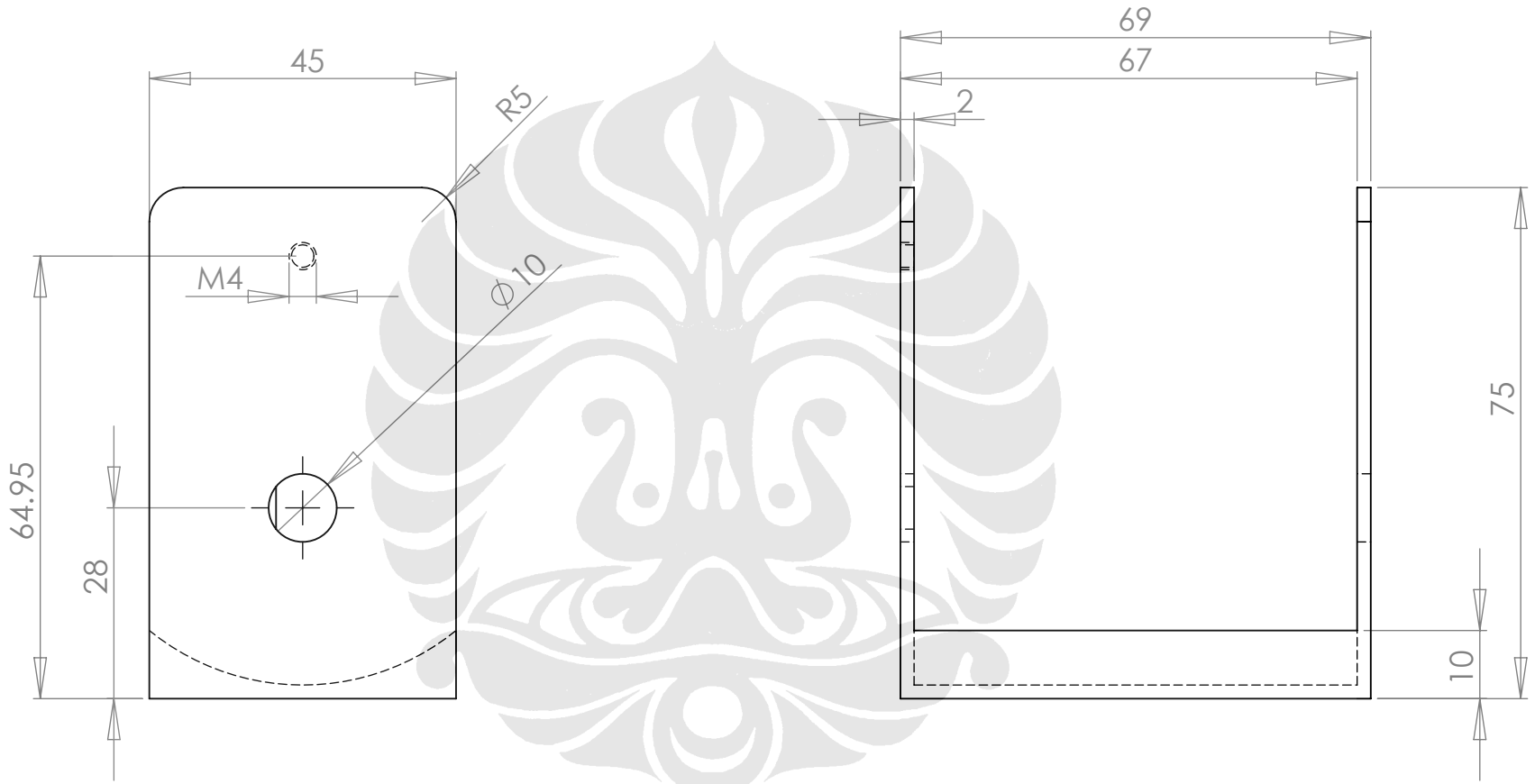

	Skala = 1 : 1	Digambar : Bogie F.S/Rhandyka Jili P	PERINGATAN
	Satuan = mm	NPM : 0404020169/0404027074	
	Tanggal = 20-06-08	Disetujui : Dr. Ir. Gandjar Kiswanto, MEng	

Pengembangan prototipe sistem ... Rhandyka Jili Prasanto, FT UI, 2008

DTM FTUI ***HOLDER*** **A4**

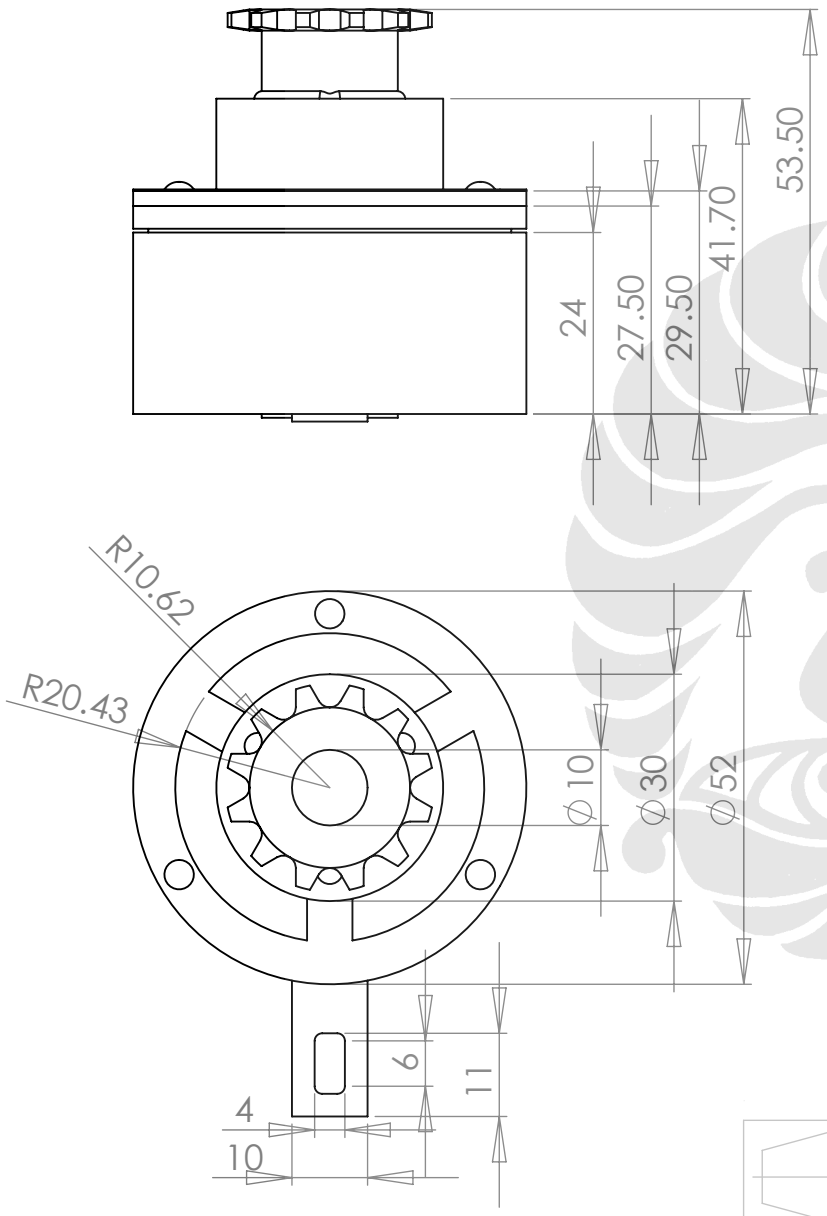

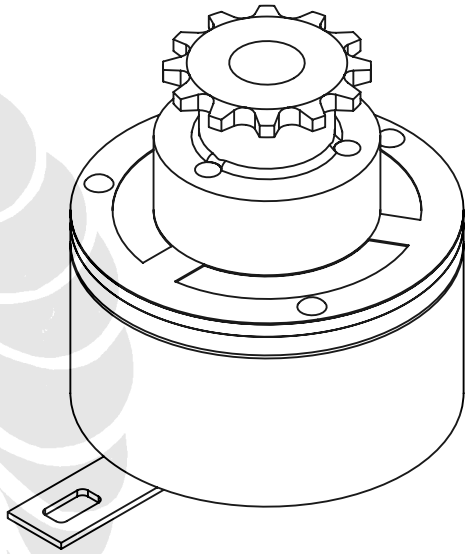

Skala = 1 : 1	Digambar : Bogie F.S/Rhandyka Jili P.	PERINGATAN
Satuan = mm	NPM : 0404020169/0404027074	
Tanggal = 20-06-08	Disetujui : Dr. Ir. Gandjar Kiswanto, MEng	

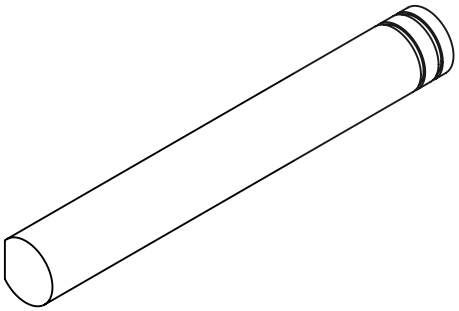

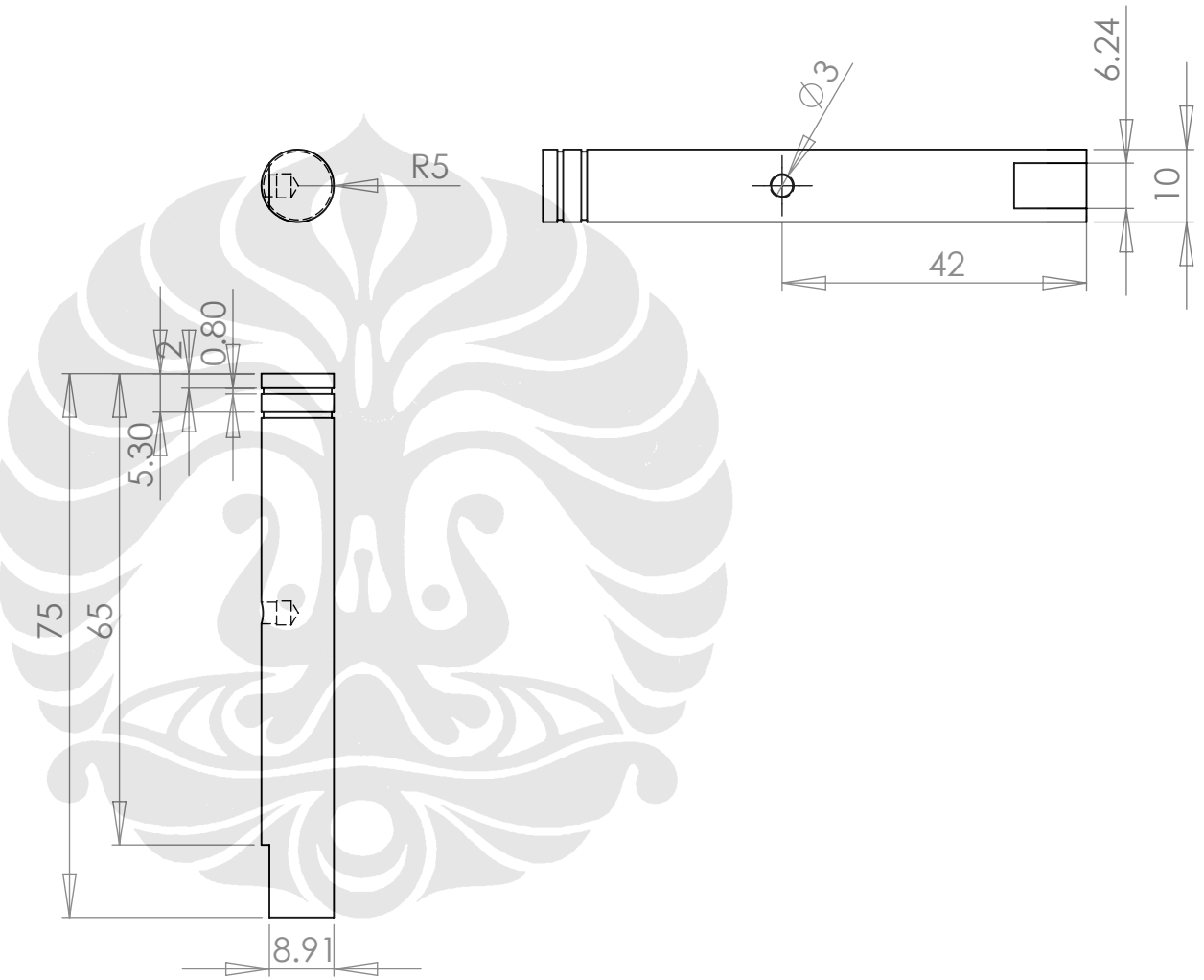

	Skala = 1 : 1	Digambar : Bogie F.S/Rhandyka Jili P.	PERINGATAN
	Satuan = mm	NPM : 0404020169/0404027074	
	Tanggal = 20-06-08	Disetujui : Dr. Ir. Gandjar Kiswanto, MEng	

Pengembangan prototipe sistem ... Rhandyka Jili Prasanto, FT UI, 2008

DTM FTUI ***SHAFT*** **A4**

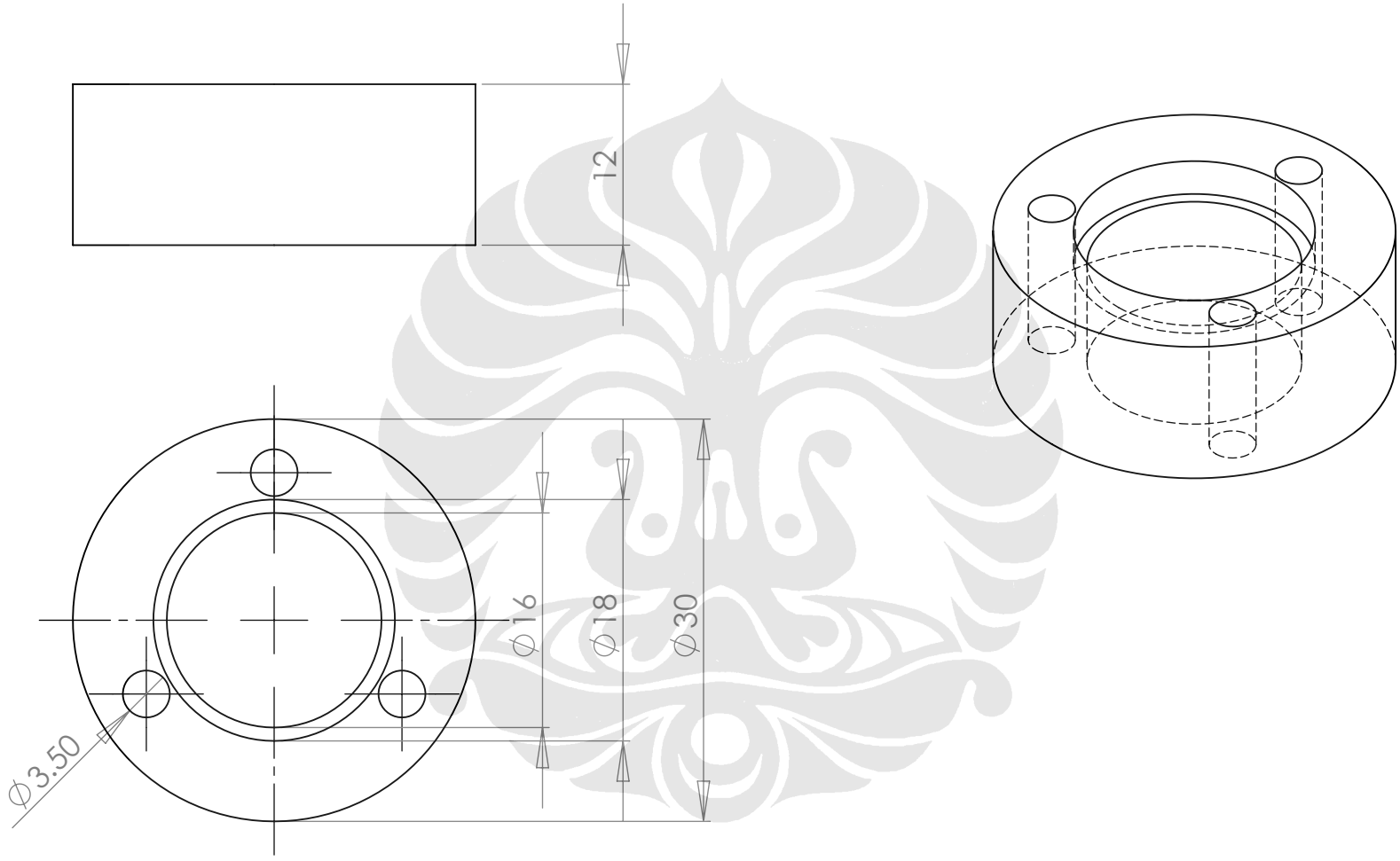

	Skala = 1 : 1	Digambar : Bogie F.S/Rhandyka Jili P.	PERINGATAN
	Satuan = mm	NPM : 0404020169/0404027074	
	Tanggal = 20-06-08	Disetujui : Dr. Ir. Gandjar Kiswanto, MEng	

DTM FTUI — *HUB SPROKET* — A4

Pengembangan prototipe sistem ... Rhandyka Jili Prasanto, FT UI, 2008

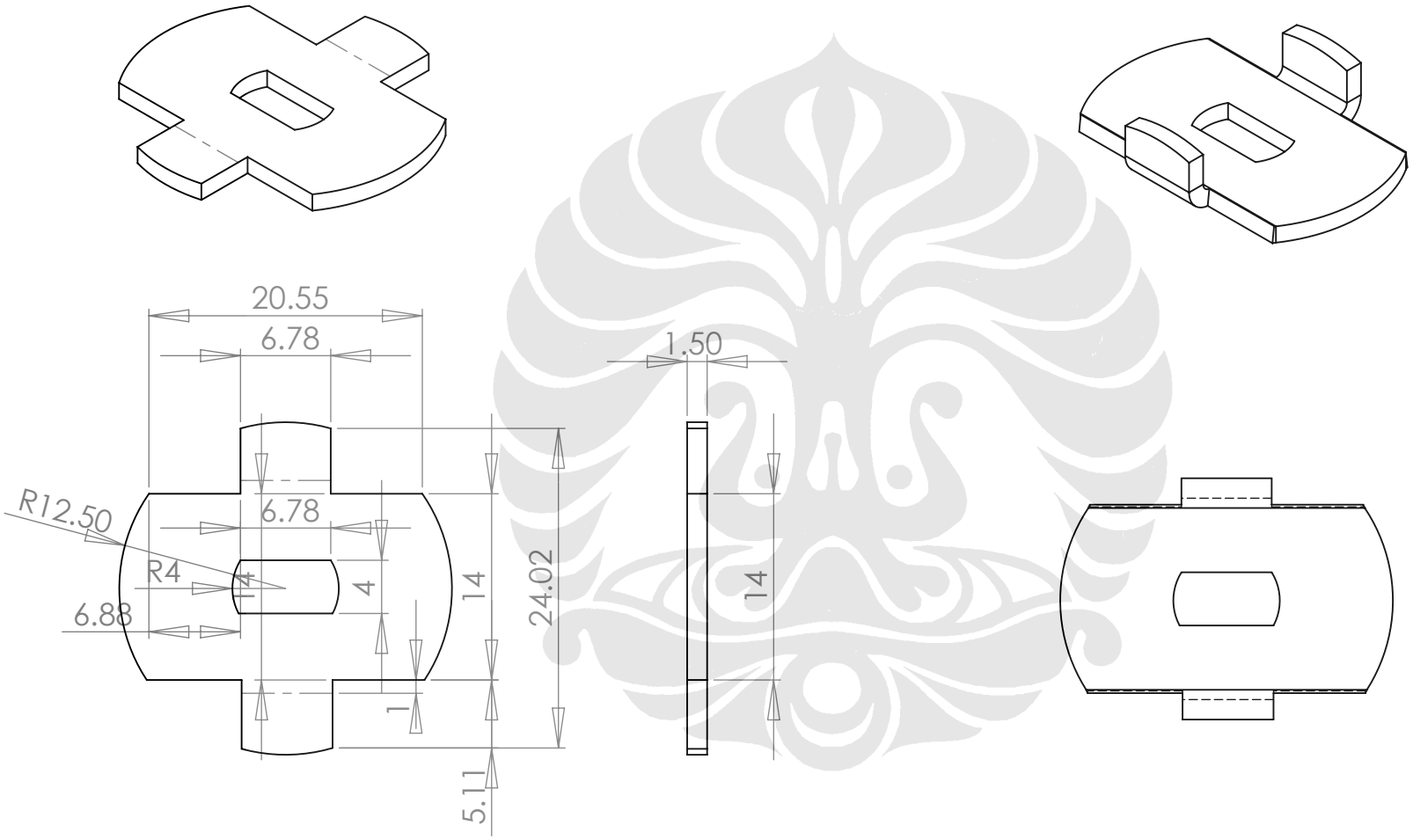

Skala = 2 : 1	Digambar : Bogie F.S/Rhandyka Jili P.	PERINGATAN
Satuan = mm	NPM : 0404020169/0404027074	
Tanggal = 21-06-08	Disetujui : Dr. Ir. Gandjar Kiswanto, MEng	

Pengembangan prototipe sistem ... Rhandyka Jili Prasanto, FT UI, 2008

DTM FTUI ***LOCKER RING*** **A4**

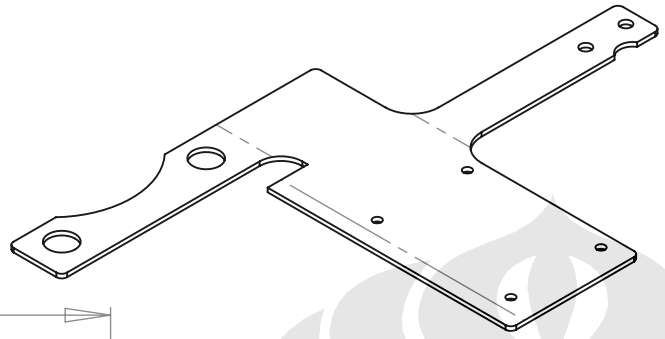

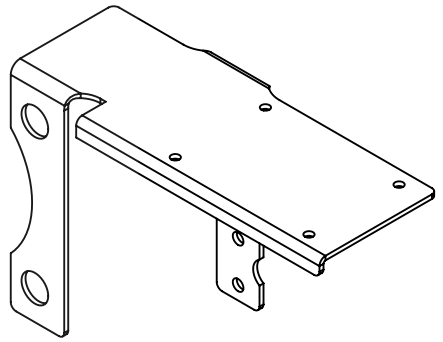

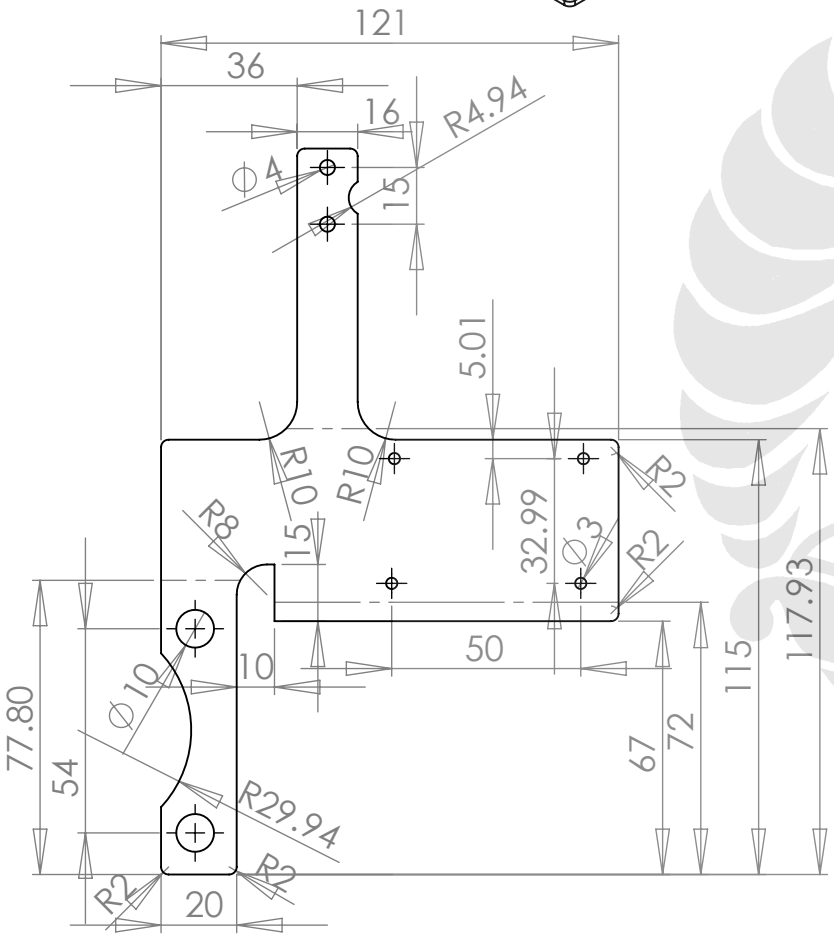

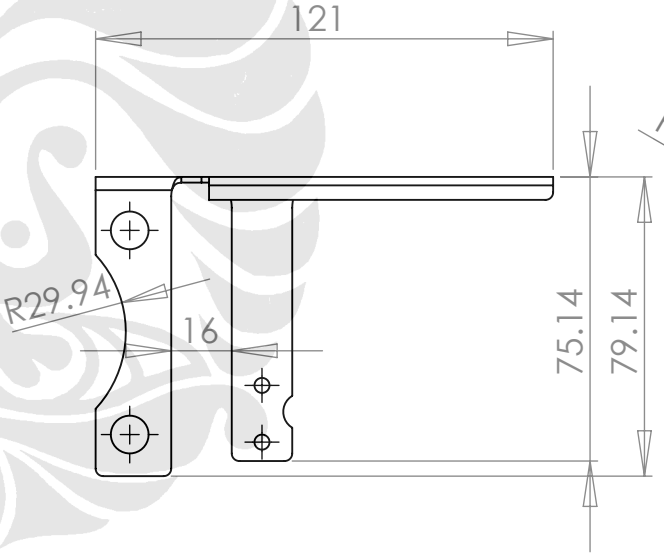

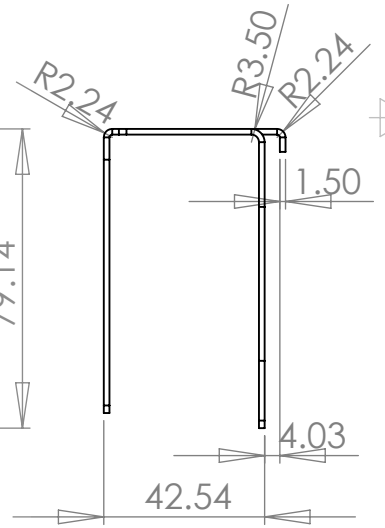

Skala = 1 : 2	Digambar : Bogie F.S/Rhandyka Jili P.	PERINGATAN
Satuan = mm	NPM : 0404020169/0404027074	
Tanggal = 20-06-08	Disetujui : Dr. Ir. Gandjar Kiswanto, MEng	

Pengembangan prototipe sistem ... Rhandyka Jili Prasanto, FT UI, 2008

DTM FTUI ***BRACKET CLUTCH*** **A4**

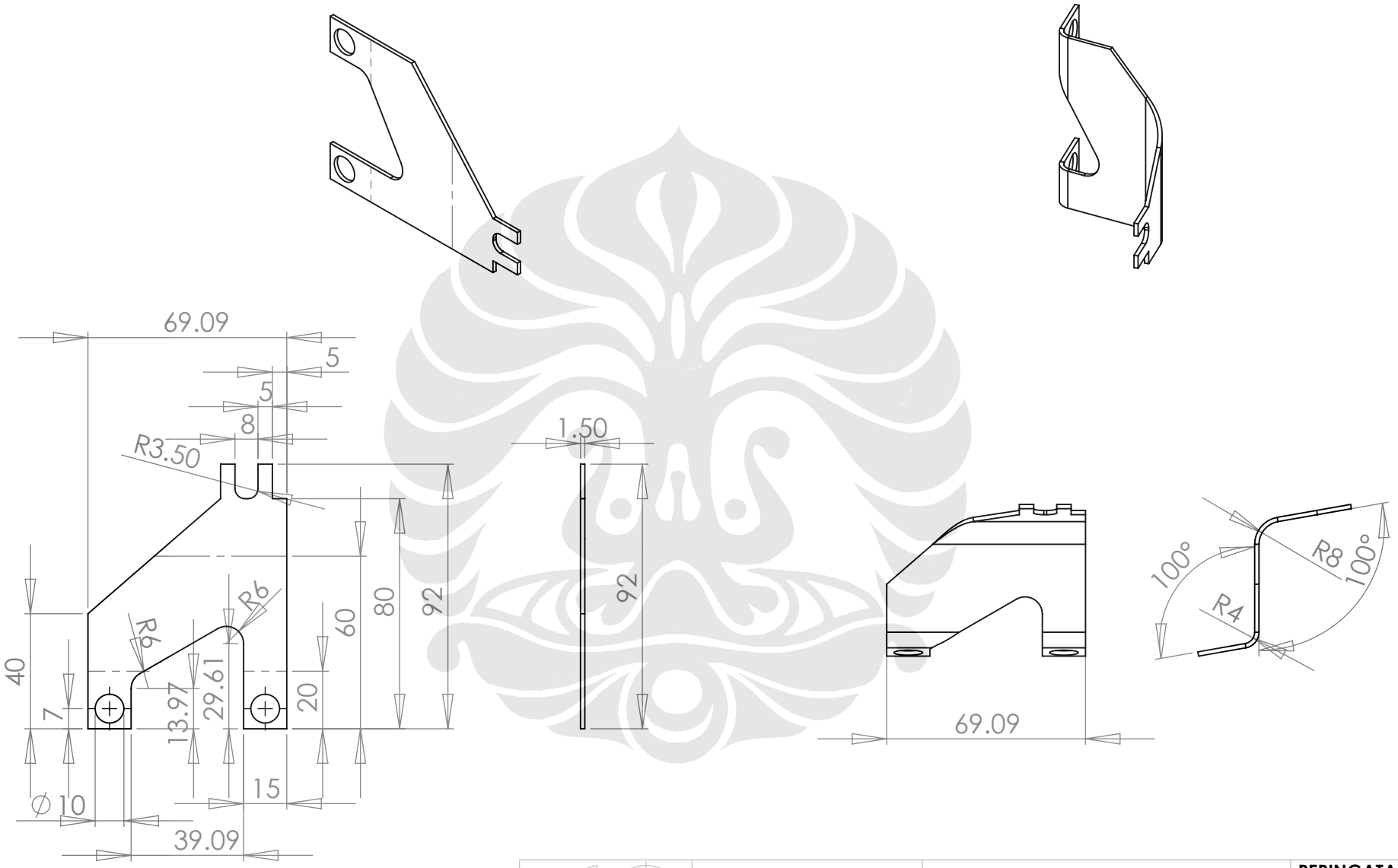

	Skala = 1 : 2	Digambar : Bogie F.S/Rhandyka Jili P.	PERINGATAN
	Satuan = mm	NPM : 0404020169/0404027074	
	Tanggal = 20-06-08	Disetujui : Dr. Ir. Gandjar Kiswanto, MEng	

Pengembangan prototipe sistem ... Rhandyka Jili Prasanto, FT UI, 2008

DTM FTUI ***BRACKET*** **A4**

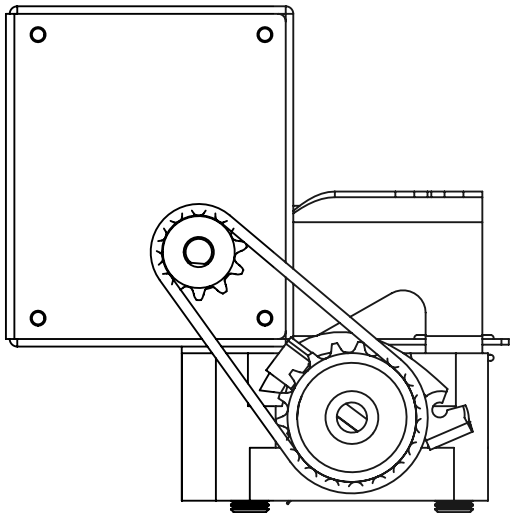

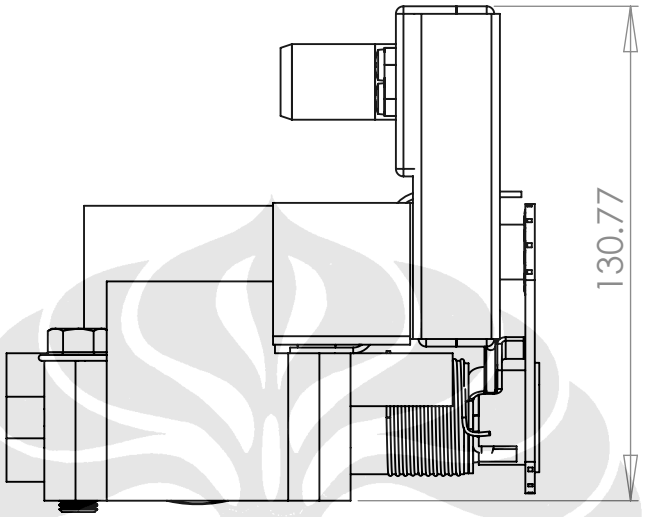

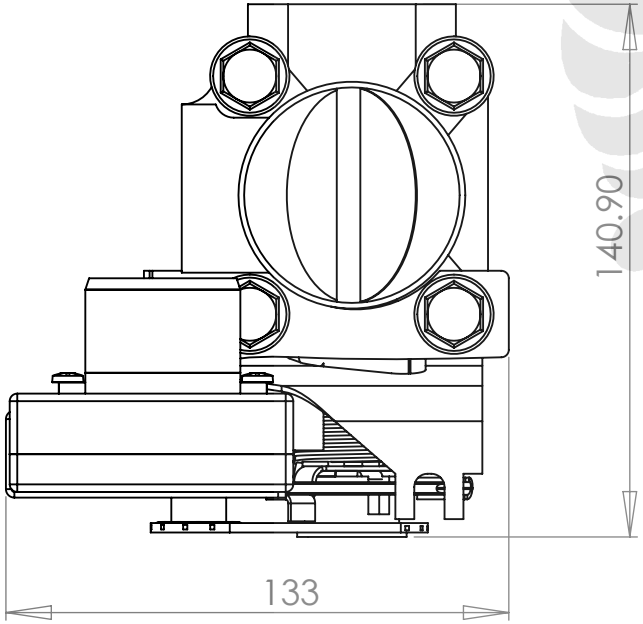

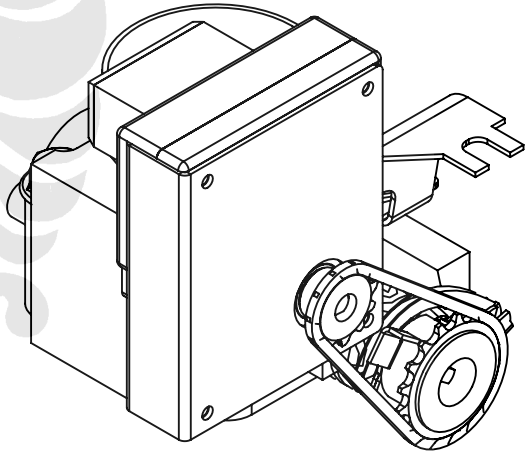

Skala = 1 : 2	Digambar : Bogie F.S/Rhandyka Jili P.	PERINGATAN
Satuan = mm	NPM : 0404020169/0404027074	
Tanggal = 20-06-08	Disetujui : Dr. Ir. Gandjar Kiswanto, MEng	

Pengembangan prototipe sistem ... Rhandyka Jili Prasanto, FT UI, 2008.

DTM FTUI ***DESIGN 02*** **A4**

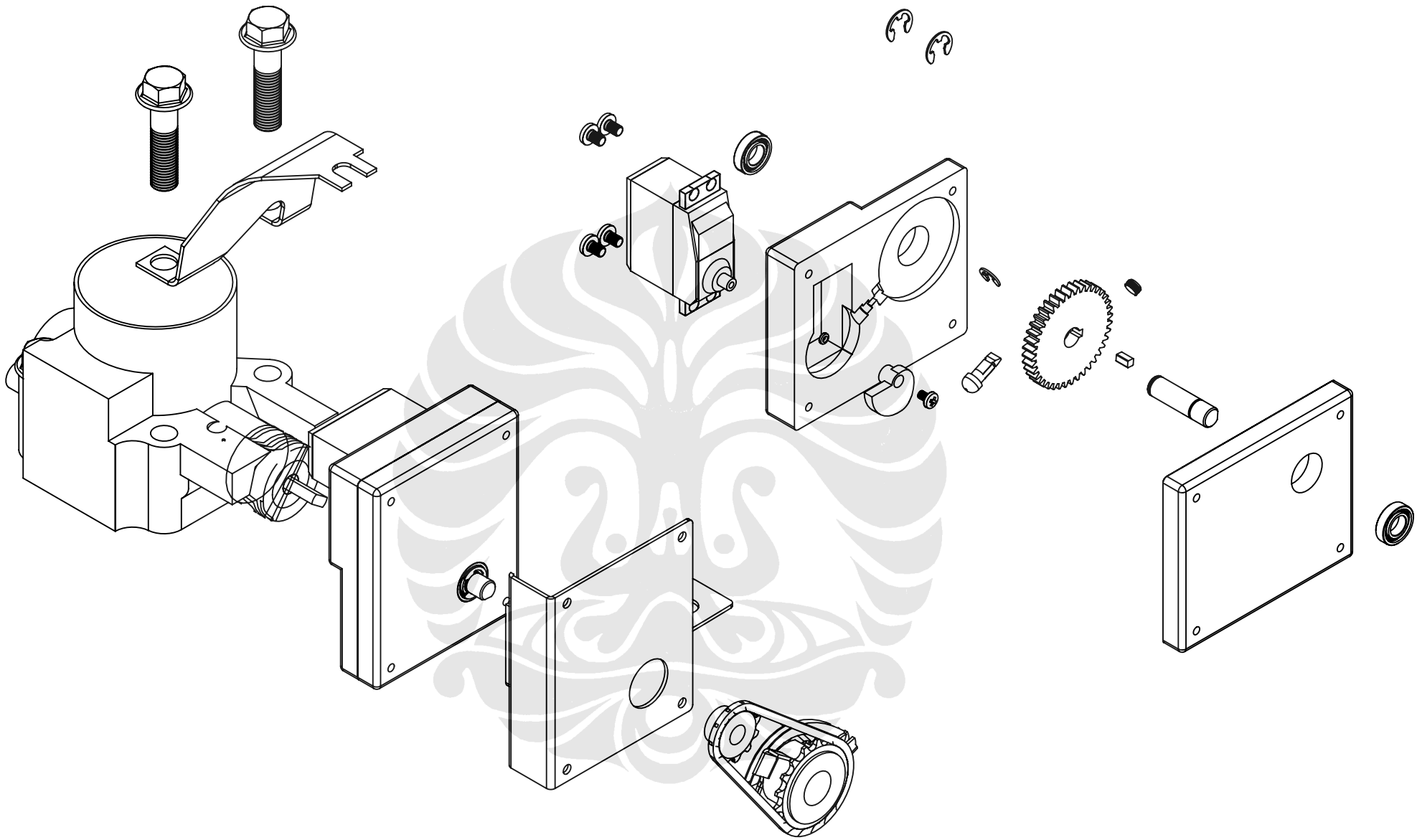

Skala = 1 : 2	Digambar : Bogie F.S/Rhandyka Jili P.	PERINGATAN
Satuan = mm	NPM : 0404020169/0404027074	
Tanggal = 20-06-08	Disetujui : Dr. Ir. Gandjar Kiswanto, MEng	

Pengembangan prototipe sistem ... Rhandyka Jili Prasanto, FT UI, 2008

DTM FTUI ***DESIGN 02*** **A4**

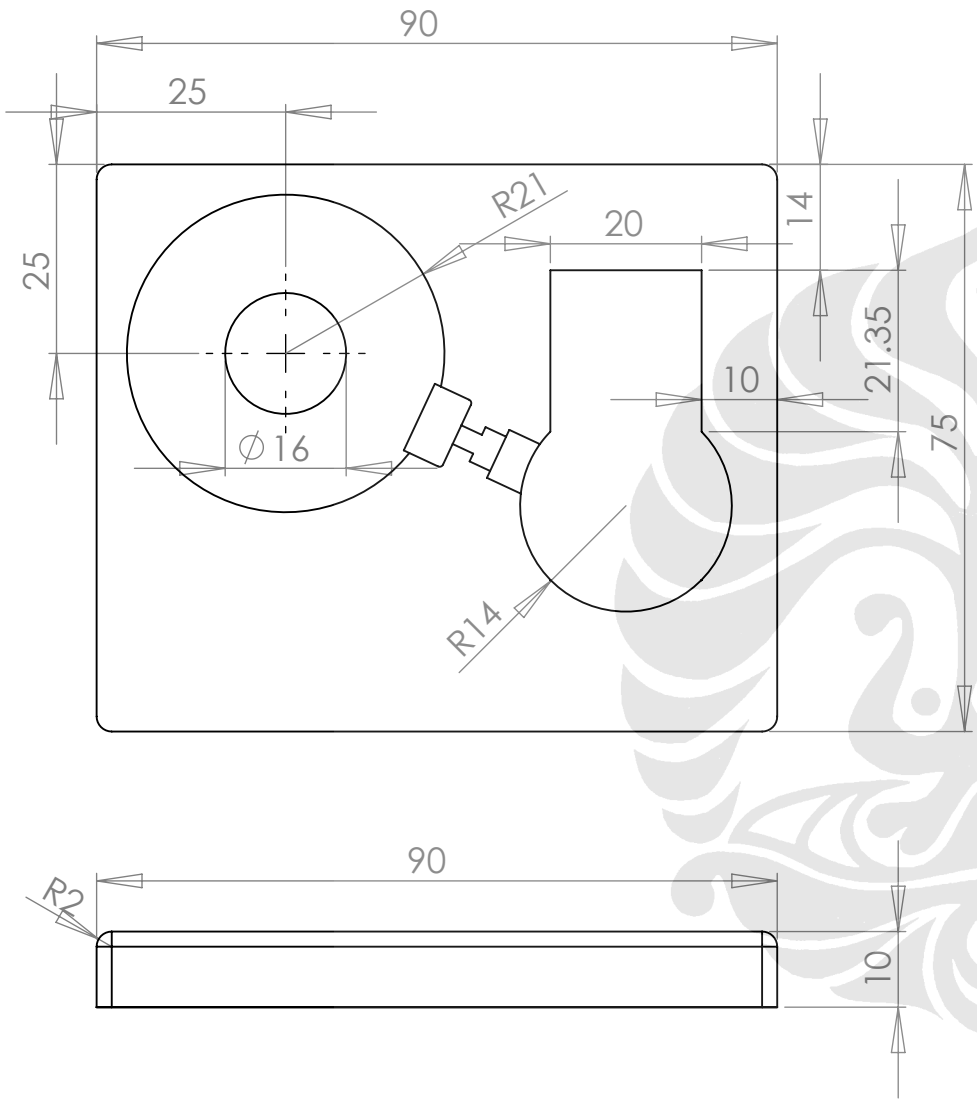

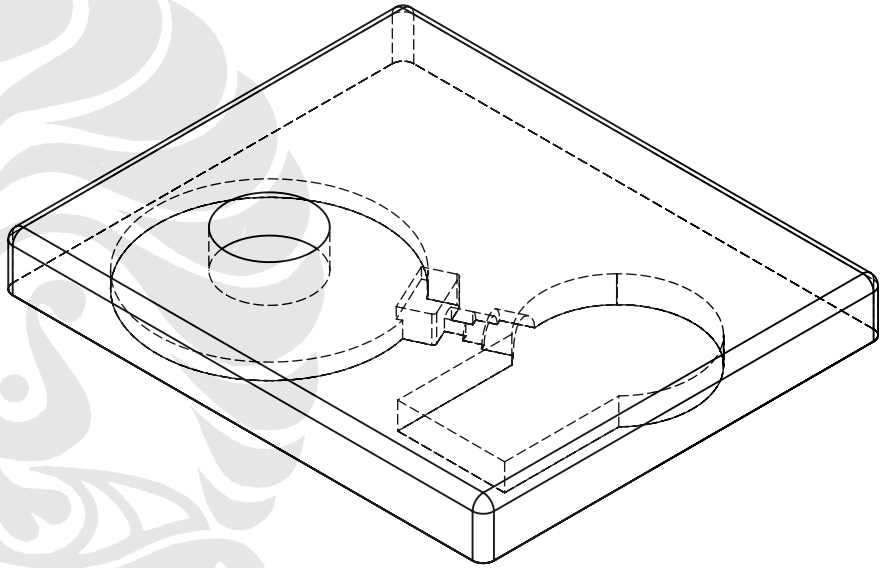

	Skala = 1 : 1	Digambar : Bogie F.S/Rhandyka Jili P.	PERINGATAN
	Satuan = mm	NPM : 0404020169/0404027074	
	Tanggal = 20-06-08	Disetujui : Dr. Ir. Gandjar Kiswanto, MEng	

Pengembangan prototipe sistem ... Rhandyka Jili Prasanto, FTUI, 2008

DTM FTUI ***BASE BAGIAN ATAS*** **A4**

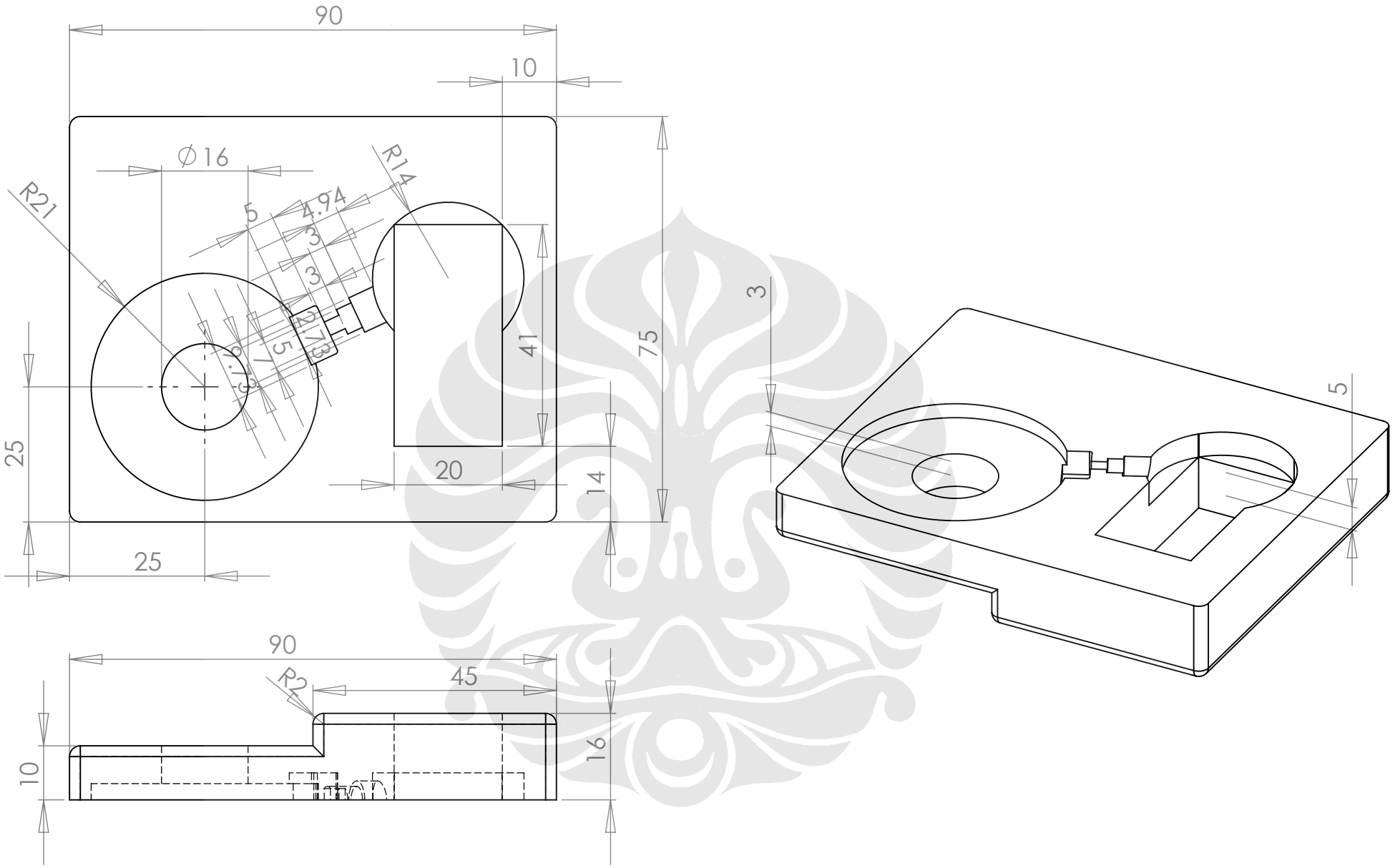

Skala = 1 : 1	Digambar : Bogie F.S/Rhandyka Jili P.	PERINGATAN
Satuan = mm	NPM : 0404020169/0404027074	
Tanggal = 20-06-08	Disetujui : Dr. Ir. Gandjar Kiswanto, MEng	

DTM FTUI — ***BASE BAGIAN BAWAH*** — **A4**

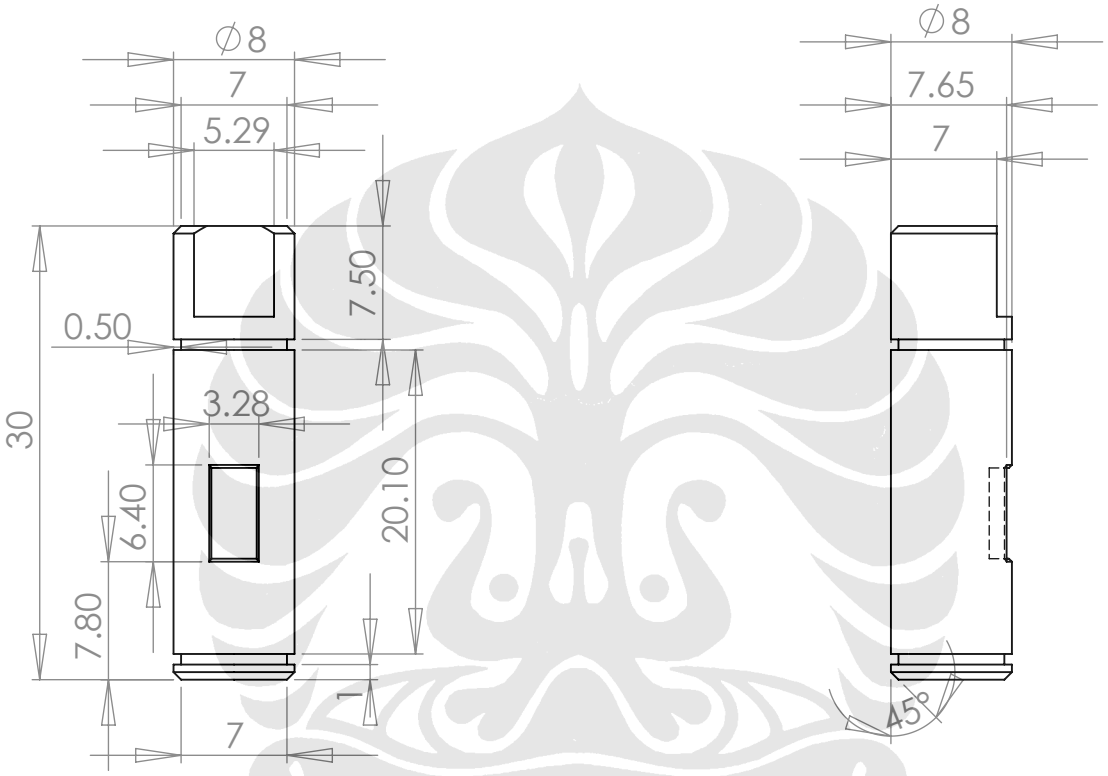

Skala = 2 : 1	Digambar : Bogie F.S/Rhandyka Jili P.	PERINGATAN
Satuan = mm	NPM : 0404020169/0404027074	
Tanggal = 20-06-08	Disetujui : Dr. Ir. Gandjar Kiswanto, MEng	

Pengembangan prototipe sistem ... Rhandyka Jili Prasanto, FT UI, 2008

DTM FTUI ***SHAFT*** **A4**

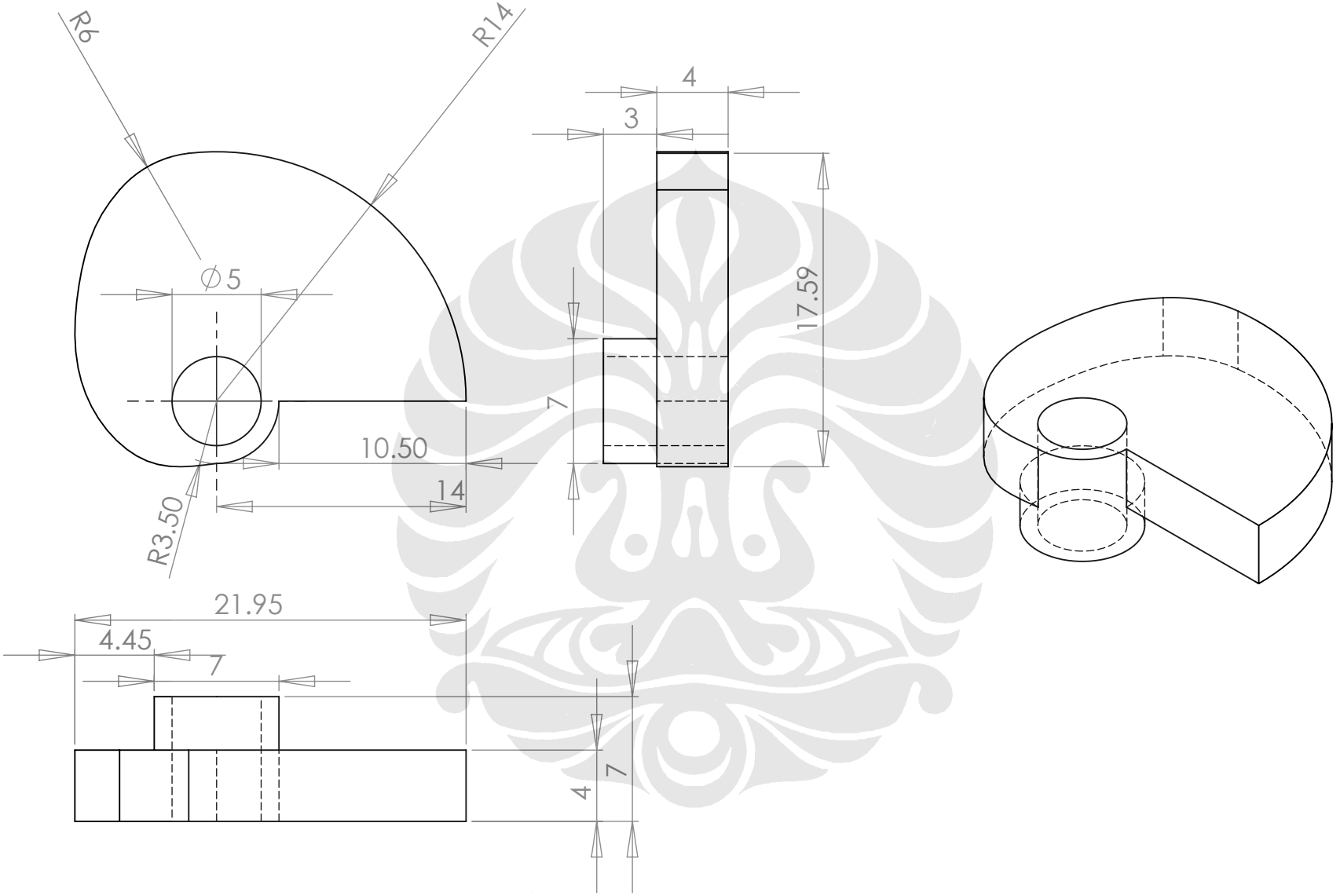

Skala = 3 : 1	Digambar : Bogie F.S/Rhandyka Jili P.	PERINGATAN
Satuan = mm	NPM : 0404020169/0404027074	
Tanggal = 20-06-08	Disetujui : Dr. Ir. Gandjar Kiswanto, MEng	

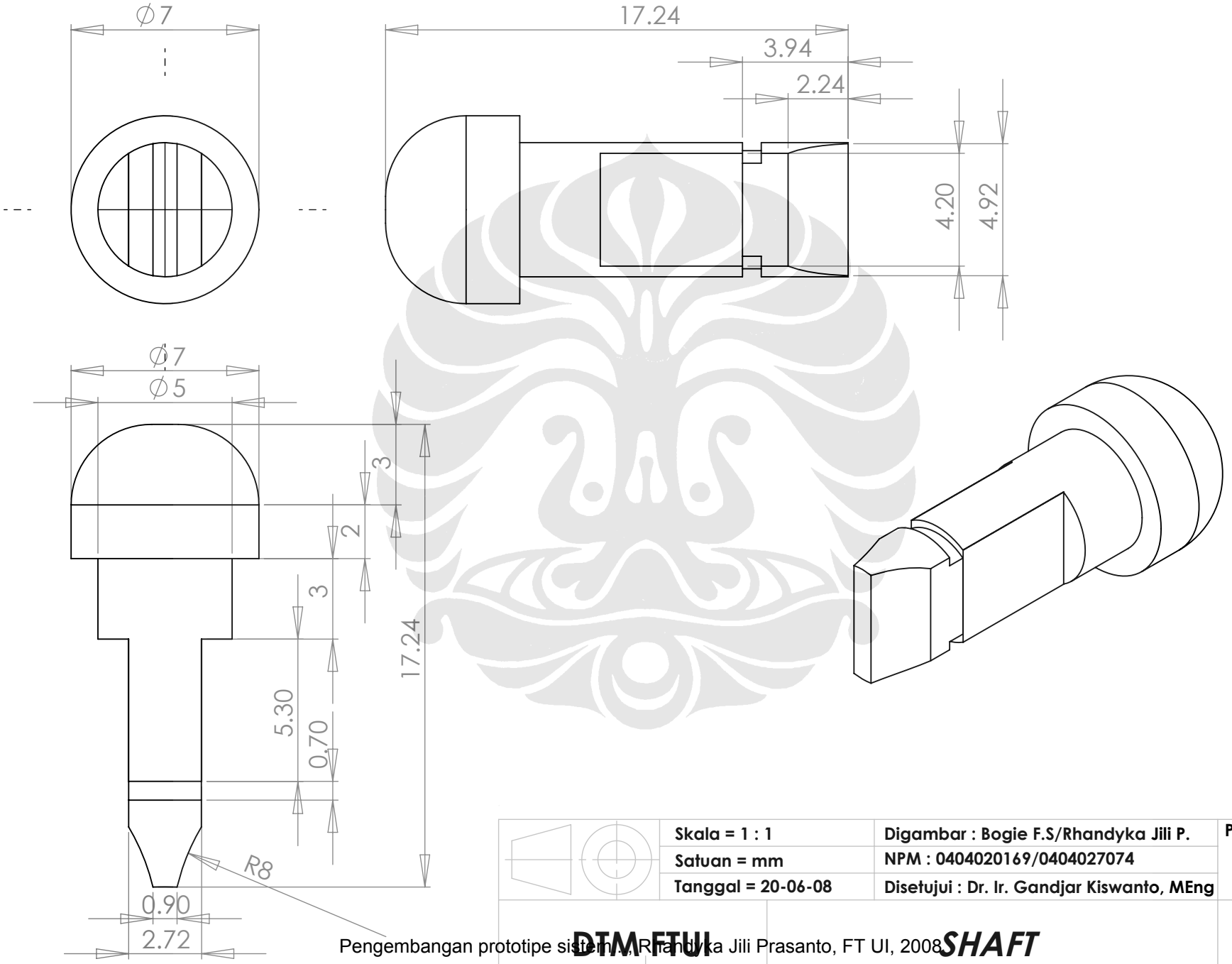

	Skala = 1 : 1	Digambar : Bogie F.S/Rhandyka Jili P.	PERINGATAN
	Satuan = mm	NPM : 0404020169/0404027074	
	Tanggal = 20-06-08	Disetujui : Dr. Ir. Gandjar Kiswanto, MEng	

Pengembangan prototipe sistem ... Rhandyka Jili Prasanto, FT UI, 2008

DTM FTUI ***SHAFT*** **A4**

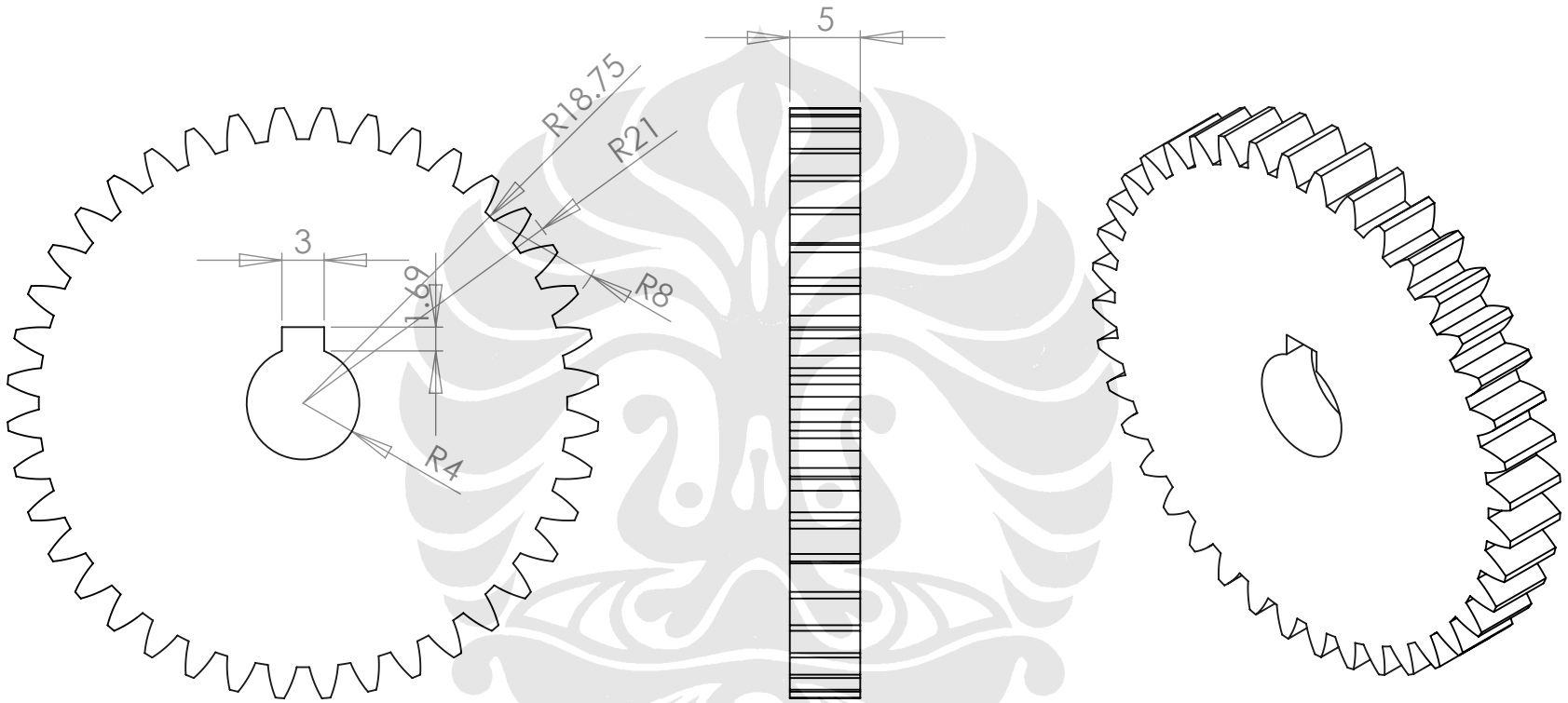

	Skala = 2 : 1	Digambar : Bogie F.S/Rhandyka Jili P.	PERINGATAN
	Satuan = mm	NPM : 0404020169/0404027074	
	Tanggal = 20-06-08	Disetujui : Dr. Ir. Gandjar Kiswanto, MEng	

DTM FTUI **RODA GIGI** A4

Pengembangan prototipe sistem ... Rhandyka Jili Prasanto, FT UI, 2008